PERFORMANCE COMMERCIAL OUTSWING ENTRANCE DOOR W/ LARGE & SMALL MISSILE IMPACT RESISTANT GLASS

GENERAL NOTES:

1. PERFORMANCE COMMERCIAL OUTSWING ENTRANCE DOOR SHOWN ON THIS PRODUCT EVALUATION DOCUMENT (P.E.D.) HAS BEEN VERIFIED FOR COMPLIANCE IN ACCORDANCE WITH THE 2017 (6TH EDITION) OF THE FLORIDA BUILDING CODE. PRODUCT MAY BE INSTALLED WITHIN HIGH VELOCITY HURRICANE ZONES (HVHZ) AND OUT OF THEM (NHVHZ).

   DESIGN WIND LOADS SHALL BE DETERMINED AS PER SECTIONS 1620 (HVHZ) & 1609 (NHVHZ) OF THE ABOVE MENTIONED CODE, FOR A BASIC WIND SPEED AS REQUIRED BY THE JURISDICTION WHERE THIS PRODUCT TO BE INSTALLED FOR A DIRECTIONALITY FACTOR Kd=0.85, USING ASCE 7-10 & SHALL NOT EXCEED THE MAXIMUM (A.S.d.) DESIGN PRESSURE RATING INDICATED ON NOTE 2.

   IN ORDER TO VERIFY THE ABOVE CONDITION, ULTIMATE DESIGN WIND LOADS DETERMINED PER ASCE 7-10 SHALL BE FIRST REDUCED TO A.S.D. DESIGN WIND LOADS BY MULTIPLYING THEM BY 0.6 IN ORDER TO COMPARE THESE W/MAX. (A.S.D.) DESIGN PRESSURE RATINGS INDICATED ON NOTE 2.

   IN ORDER TO VERIFY THAT ANCHORS ON THIS P.E.D., AS TESTED, WERE NOT OVERSTRESSED, A 33% INCREASE IN ALLOWABLE STRESS FOR WIND LOADS WAS NOT USED IN THEIR ANALYSIS.
   FASTENERS SPACING TO WOOD HAS BEEN DETERMINED IN ACCORDANCE WITH N.D.S. 2015.

   THIS PRODUCT'S ADEQUACY FOR IMPACT AND WIND RESISTANCE HAS BEEN VERIFIED IN ACCORDANCE WITH SECTIONS 1626 & 1609.1.2 OF THE ABOVE MENTIONED CODE AS PER PROTOCOLS TAS-201, TAS-202, TAS-203, PER FENESTRATION TESTING LABORATORY REPORT # 10553 AS PER SUBMITTED STRUCTURAL CALCULATIONS, PERFORMED AS PER SECTIONS 1616 & 1604 OF THE FLORIDA BUILDING CODE.

2. MAXIMUM A.S.D. DESIGN PRESSURE RATING FOR ALUMINUM ENTRANCE DOOR SHALL BE AS PER SCHEDULES ON SHEETS 32 & 33.

3. THIS PRODUCT WILL NOT REQUIRE A HURRICANE PROTECTION DEVICE .

4. THIS PRODUCT IS APPROVED FOR WATER INFILTRATION ONLY WHEN CANOPY IS PROVIDED IMMEDIATELY ABOVE THE DOOR LOCATION COVERING THE ENTIRE WIDTH OF DOOR AND PROJECTING OUT A DISTANCE EQUAL OR LARGER THAN THE DOOR HEIGHT, PER FLORIDA BUILDING CODE SECTION 1709.5.2.

5. PROVIDE 1/4" MAX. LOAD BEARING SHIM (TYP.) WHEN ALLOWED BY THIS DRAWING.

6. ALL SCREWS USED FOR ASSEMBLY CONNECTIONS TO BE STAINLESS STEEL 304 OR 316 AISI SERIES OF CORROSION RESISTANT COATED CARBON STEEL AS PER DIN 50018 AND SECTION 2411.3.3.4 OF THE FLORIDA BUILDING CODE WITH 510 ksi YIELD STRENGTH AND 790 ksi TENSILE STRENGTH.

7. **ANCHOR NOTES:**

   A) **TO EXISTING POURED CONCRETE:**
   (MIN. f'c=2,730 psi), MIN. EDGE DISTANCE (E.D)=2 1/2"
   1/4" ø ULTRACON ANCHOR W/ 1 3/4" MIN. EMBEDMENT, AS MANUFACTURED BY ELCO CONSTRUCTION PRODUCTS

   B) **TO EXISTING A.S.T.M. C-90 CONCRETE BLOCK WALL:**
   MIN. EDGE DISTANCE (E.D)=2 1/2"
   1/4" ø ULTRACON ANCHOR W/ 1 1/4" MIN. EMBEDMENT, AS MANUFACTURED BY ELCO CONSTRUCTION PRODUCTS

   C) **TO EXISTING 2 x P.T. WOOD BUCK:**
   MIN. EDGE DISTANCE (E.D)=1"
   1/4" ø ULTRACON ANCHOR W/ 1 1/2" MIN. EMBEDMENT, AS MANUFACTURED BY ELCO CONSTRUCTION PRODUCTS

   D) **TO EXISTING MIN. 1/8" THICK ALUMINUM TUBE (6063-T5 ALLOY):**
   MIN. EDGE DISTANCE (E.D)=1/2"
   1/4" ø-14 TEK SCREW, AS MANUFACTURED BY ITW/BUILDEX, INC. FULLY ENGAGED.

   E) **TO EXISTING MIN. 16 GAGE STEEL MEMBER (MIN. A-653 GRADE 33 OR A-36):**
   MIN. EDGE DISTANCE (E.D)=1/2"
   1/4" ø-14 TEK SCREW, AS MANUFACTURED BY ITW/BUILDEX, INC. FULLY ENGAGED.

8. WOOD BUCKS BY OTHERS, MUST BE ANCHORED PROPERLY TO TRANSFER LOADS TO THE BUILDING STRUCTURE, WOOD BUCKS MUST BE SOUTHERN PINE # 2, G=0.55, AND SHALL COMPLY WITH SECTIONS 2411.3.3.3 OF THE 2017 (6th EDITION) OF THE FLORIDA BUILDING CODE.

   (8.1) 2 x WOOD BUCKS MUST BE PROPERLY ANCHORED TO EXISTING STRUCTURE TO TRANSFER LOADS TO IT. ANCHORAGE IS INDEPENDENT OF DOOR FRAME ANCHORAGE. DOOR FRAME MUST BE SEPARATELY ANCHORED TO 2 x WOOD BUCK FOLLOWING DETAILS ON THIS DRAWING.

   (8.2) 1 x WOOD BUCK (OR ANY WOOD BUCK LESS THAN 2X) MUST BE PROPERLY ANCHORED TO EXISTING STRUCTURE TO TRANSFER LOADS TO IT. DOOR FRAME ANCHOR SHALL BE USED TO ATTACH 1X WOOD BUCK TO EXISTING STRUCTURE BY DRIVING ANCHOR THRU BOTH DOOR FRAME & 1 x WOOD BUCK INTO EXISTING STRUCTURE W/ PROPER EMBEDMENT AND EDGE DISTANCE AS SHOWN ON THIS DRAWING.

   (8.3) DOOR FRAME MAY BE DIRECTLY CONNECTED TO EXISTING STRUCTURE WITH NO NEED OF WOOD BUCKS WHEN MASONRY OPENING IS NOT LARGER THAN ACTUAL DOOR OVERALL DIMENSIONS. HOWEVER, SHIMS (SEE NOTE 10) MAY BE ALLOWED AT DOOR FRAME ANCHOR LOCATION IF NEEDED.

9. REMAINING COMPONENTS FOR THIS PRODUCT SHALL BE AS INDICATED ON BILL OF MATERIALS, SHEETS 4 & 5 OF THIS DRAWING.

10. ALL ALUMINUM EXTRUSIONS IN CONTACT WITH DISSIMILAR MATERIALS SHALL COMPLY WITH SECTION III-6 OF THE ALUMINUM DESIGN MANUAL.

11. SHOP DRAWINGS PREPARED BASED ON THIS APPROVAL AND TAKING INTO ACCOUNT THE SPECIFIC JOB CONDITIONS, SHALL BE SUBMITTED TO THE BUILDING OFFICIAL AS PART OF THE PERMIT DOCUMENTS.

12. SUBSTRATE MATERIAL NOTED ON THIS DRAWING AS EXISTING BY OTHERS, POURED CONCRETE, GROUT FILLED CONCRETE BLOCK, WOOD AND METAL MUST WITHSTAND THE LOADS IMPOSED BY THIS PRODUCT.

13. THIS PRODUCT'S INSTALLATION SHALL COMPLY WITH ALL SPECS INDICATED IN THIS DRAWING PLUS ANY BUILDING AND ZONING REGULATIONS PROVIDED BY THE JURISDICTION WHERE PERMIT IS APPLIED TO.

14. (a) THIS P.E.D. PREPARED BY THIS ENGINEER IS GENERIC AND DOES NOT PROVIDE INFORMATION FOR A SITE SPECIFIC PROJECT; i.e.. WHERE THE SITE CONDITIONS DEVIATE FROM THE P.E.D.

    (b) CONTRACTOR TO BE RESPONSIBLE FOR THE SELECTION, PURCHASE AND INSTALLATION INCLUDING LIFE SAFETY ON THIS PRODUCT, BASED ON THIS P.E.D. PROVIDED HE/SHE DOES NOT DEVIATE FROM THE CONDITIONS DETAILED ON THIS DOCUMENT. CONSTRUCTION SAFETY AT SITE IS THE CONTRACTOR'S RESPONSIBILITY.

    (C) THIS P.E.D. WILL BE CONSIDERED INVALID IF ALTERED BY ANY MEANS.

    (d) SITE SPECIFIC PROJECTS SHALL BE PREPARED BY A FLORIDA REGISTERED ENGINEER OR ARCHITECT WHICH WILL BECOME THE ENGINEER OF RECORD (E.O.R.) FOR THE PROJECT AND WHO WILL BE RESPONSIBLE FOR THE PROPER USE OF THE P.E.D. ENGINEER OF RECORD ACTING AS DELEGATED ENGINEER TO THE P.E.D. ENGINEER, SHALL SUBMIT TO THIS LATTER THE SITE SPECIFIC DRAWINGS FOR REVIEW.

    (e) ORIGINAL P.E.D. SHALL BEAR THE DATE AND ORIGINAL SEAL AND SIGNATURE OF THE PROFESSIONAL ENGINEER OF RECORD THAT PREPARED IT.

15. PRODUCT MANUFACTURER'S LABEL SHALL BE LOCATED ON A READILY VISIBLE LOCATION AT PRODUCT IN ACCORDANCE WITH SECTION 1709.5 OF THE FLORIDA BUILDING CODE. ONE LABEL SHALL BE PLACED FOR EVERY OPENING.

THIS DRAWING SHALL ONLY BE USED TO OBTAIN PERMITS IN THE STATE OF FLORIDA

FLORIDA BUILDING CODE (HIGH & NON HIGH VELOCITY HURRICANE ZONE)

PERFORMANCE COMMERCIAL OUTSWING ENTRANCE DOOR

F.R.L.
DRAWN BY:

06/13/19
DATE:

19-057
DRAWING No.

SHEET 1 OF 33

ALUMINA DISTRIBUTION CENTER
15002 NW. 107 AVE.
HIALEAH GARDENS, FL. 33018
PHONE: (305) 444-1198

REV. NO	DESCRIPTION	DATE	REV. No	DESCRIPTION	DATE
1	-	-	3	-	-
2	-	-	4	-	-

©2019 TILTECO, INC.

TILTECO INC.
TILLIT TESTING & ENGINEERING COMPANY
8355 N.W. 36th. St., Ste. 305, VIRGINIA GARDENS, Fl. 33166
Phone : (305)871-1530 . Fax : (305)871-1531
CA-0006719
WALTER A. TILLIT Jr. P.E.
FLORIDA Lic. # 44167

WALTER A. TILLIT JR. LICENSE No. 44167 STATE OF FLORIDA PROFESSIONAL ENGINEER

P.E. SEAL/SIGNATURE/DATE

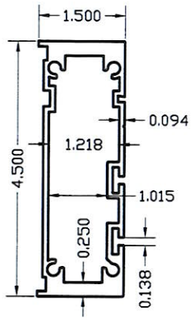

1 FRAME HEAD, JAMB & MULLION
6063–T6 ALLOW

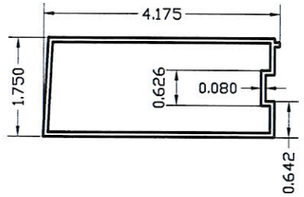

5 HINGE STILE
6063–T6 ALLOY

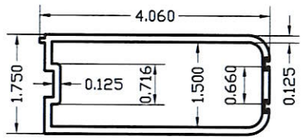

6 ACTIVE & IN–ACTIVE STILE
6005–T5 ALLOY

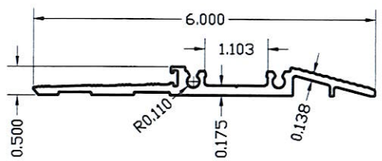

3 ADA–THRESHOLD
6063–T6 ALLOY

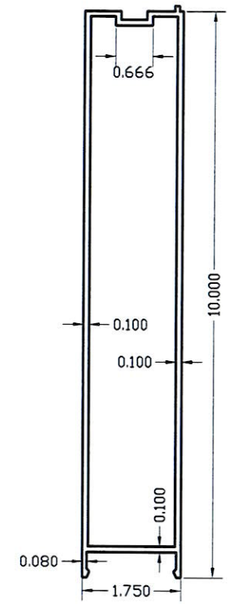

7A 10" BOTTOM RAIL
6063–T6 ALLOY

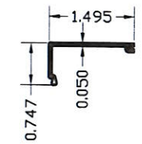

9 DOOR SCREW COVER
6063–T6 ALLOY

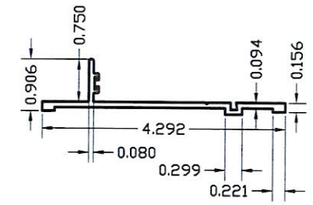

2 MULLION INSERT (TRANSOM)
6063–T6 ALLOY

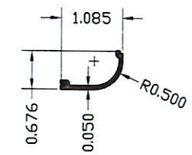

9A ALT. DOOR SCREW COVER
6063–T6 ALLOY

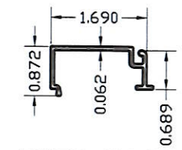

11 FIXED PANEL GLAZING BEAD LAMINATED GLASS
6063–T6 ALLOY

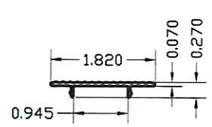

4 ADA–THRESHOLD SCREW COVER
6063–T6 ALLOY

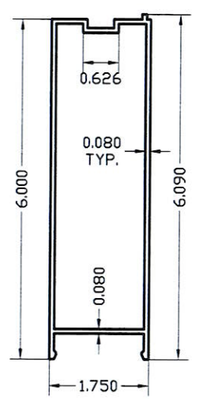

7 TOP & BOTTOM RAIL
6063–T6 ALLOY
(QUALIFIES 7A , 10" TALL BOTTOM RAIL)

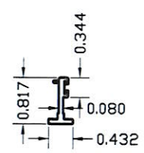

8 DOOR STOPPER ADAPTOR
6063–T6 ALLOY

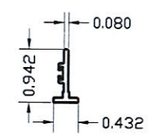

10 GLAZING ADAPTER FIXED PANEL
6063–T6 ALLOY

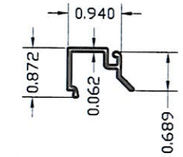

12 FIXED PANEL GLAZING STOP INSULATED GLASS
6063–T6 ALLOY

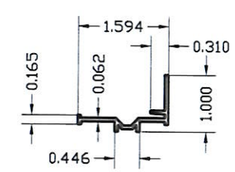

13 DOOR GLAZING ADAPTER
6063–T6 ALLOY

COMPONENTS

SCALE N.T.S.

FLORIDA BUILDING CODE (HIGH & NON HIGH VELOCITY HURRICANE ZONE)

PERFORMANCE COMMERCIAL OUTSWING ENTRANCE DOOR

ALUMINA DISTRIBUTION CENTER
15002 NW. 107 AVE.
HIALEAH GARDENS, FL. 33018
PHONE: (305) 444–1198

F.R.L. DRAWN BY:
06/13/19 DATE:
19–057 DRAWING No.
SHEET 2 OF 33

REV. NO	DESCRIPTION	DATE	REV. No	DESCRIPTION	DATE
1	-	-	3	-	-
2	-	-	4	-	-

©2019 TILTECO, INC.

TILTECO INC.
TILLIT TESTING & ENGINEERING COMPANY
6355 N.W. 36th. St., Ste. 305, VIRGINIA GARDENS, FL. 33166
Phone : (305)871–1530 , Fax : (305)871–1531
CA–0006719
WALTER A. TILLIT Jr. P.E.
FLORIDA Lic. # 44167

WALTER A. TILLIT JR. LICENSE No. 44167 STATE OF FLORIDA PROFESSIONAL ENGINEER

6/13/19

SEAL/SIGNATURE/DATE

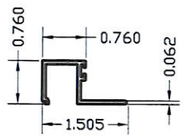

DOOR GLAZING BEAD LAMINATED GLASS
14A 6063–T6 ALLOW

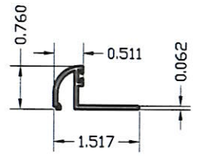

ALT. DOOR GLAZING BEAD INSULATED GLASS FOR 13/16"
14D 6063–T6 ALLOW

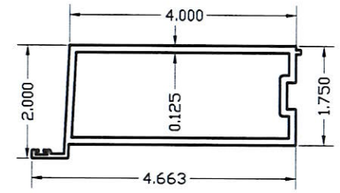

ACTIVE ASTRAGAL STILE
16A 6005–T5 ALLOW

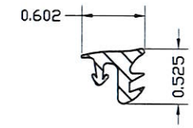

GLAZING GASKET
19 TPE

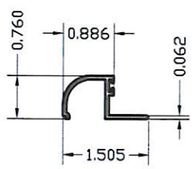

ALT. DOOR GLAZING BEAD LAMINATED GLASS
14B 6063–T6 ALLOW

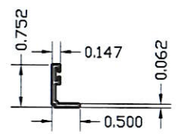

DOOR GLAZING BEAD INSULATED GLASS
14E 6063–T6 ALLOW

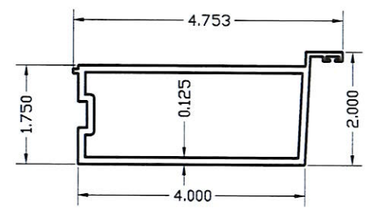

INACTIVE ASTRAGAL STILE
16B 6005–T5 ALLOW

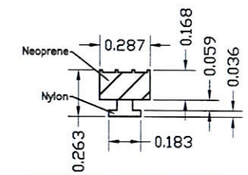

SOLID RUBBER GASKET
20 NEOPRENE / NYLON

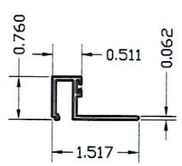

DOOR GLAZING BEAD INSULATED GLASS FOR 13/16"
14C 6063–T6 ALLOW

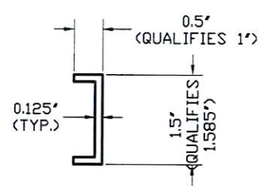

RETAINER CLIP
15 (U–CHANNEL)
6063–T6 ALLOW
5" & 8" LONG

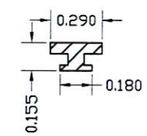

GLAZING GASKET
21 TPE

COMPONENTS (CONT'D)

SCALE N.T.S.

FLORIDA BUILDING CODE (HIGH & NON HIGH VELOCITY HURRICANE ZONE)

PERFORMANCE COMMERCIAL OUTSWING ENTRANCE DOOR

ALUMINA DISTRIBUTION CENTER
15002 NW. 107 AVE.
HIALEAH GARDENS, FL. 33018
PHONE: (305) 444-1198

F.R.L. DRAWN BY:
06/13/19 DATE:
19–057 DRAWING No.
SHEET 3 OF 33

REV. NO	DESCRIPTION	DATE	REV. No	DESCRIPTION	DATE
1	-	-	3	-	-
2	-	-	4	-	-

©2019 TILTECO, INC.

TILTECO INC.
TILLIT TESTING & ENGINEERING COMPANY
6355 N.W. 36th. St., Ste. 305, VIRGINIA GARDENS, FL. 33166
Phone : (305)871–1530 , Fax : (305)871–1531
CA–0006719
WALTER A. TILLIT Jr. P.E.
FLORIDA Lic. # 44167

WALTER A. TILLIT JR. ★ LICENSE No. 44167 ★ STATE OF FLORIDA ★ PROFESSIONAL ENGINEER

6/13/19

SEAL/SIGNATURE/DATE

BILL OF MATERIALS

COMPONENT #	DESCRIPTION	DIMENSIONS/REMARKS	MATERIAL
1	FRAME HEAD, SILL & JAMB	SEE SHEET 2	6063-T6
2	MULLION INSERT (TRANSOM)	SEE SHEET 2	6063-T6
3	ADA-THRESHOLD	SEE SHEET 2	6063-T6
4	ADA-THRESHOLD SCREW COVER	SEE SHEET 2	6063-T6
5	HINGE STILE	SEE SHEET 2	6063-T6
6	ACTIVE & IN-ACTIVE STILE	SEE SHEET 2	6005-T5
7	TOP & BOTTOM RAIL	SEE SHEET 2	6063-T6
7A	10" BOTTOM RAIL	SEE SHEET 2	6063-T6
8	DOOR STOPPER ADAPTOR	SEE SHEET 2	6063-T6
9	SQUARE DOOR SCREW COVER	SEE SHEET 2	6063-T6
9A	ROUND DOOR SCREW COVER	SEE SHEET 2	6063-T6
10	GLAZING ADAPTER FIXED PANEL	SEE SHEET 2	6063-T6
11	FIXED PANEL GLAZING LAMINATED GLASS	SEE SHEET 2	6063-T6
12	FIXED PANEL GLAZING LAMINATED GLASS	SEE SHEET 2	6063-T6
13	DOOR GLAZING ADAPTER	SEE SHEET 2	6063-T6
14A	DOOR GLAZING BEAD LAMINATED GLASS	SEE SHEET 3	6063-T6
14B	ALT. DOOR GLAZING BEAD LAMINATED GLASS	SEE SHEET 3	6063-T6
14C	DOOR GLAZING BEAD INSULATED GLASS FOR 13/16"	SEE SHEET 3	6063-T6
14D	ALT. DOOR GLAZING BEAD INSULATED GLASS FOR 13/16"	SEE SHEET 3	6063-T6
14E	DOOR GLAZING BEAD INSULATED GLASS FOR 1-5/16"	SEE SHEET 3	6063-T6
15	RETAINER CLIP	SEE SHEET 3	6063-T6
16A	ACTIVE ASTRAGAL STILE	SEE SHEET 3	6005-T5
16B	INACTIVE ASTRAGAL STILE	SEE SHEET 3	6005-T5
19	GLAZING GASKET	SEE SHEET 3	TPE
20	SOLID RUBBER GASKET	SEE SHEET 3	NEOPRENE/NYLON
21	GLAZING GASKET	SEE SHEET 3	TPE
22	#10 x 5/8" S.S. TEK SCREW	GLAZING ADAPTER ASSEMBLY SCREW	STEEL
23	#14 x 1/2" HEX HEAD S.S. TEK SCREW	MULLION INSERT CONNECTION (5" start & 9" max o.c)	STEEL
24	#14 x 2 1/2" H.H SCREW	FRAME ASSEMBLY	STEEL
27	CONTINUOS THREADED ROD	3/8"Ø, W/ (4) S.S. SECURITY NUTS W/ NYLON INSERT EACH DOOR PANEL (2 PER DOOR)	STEEL
28	GLAZING BULB / WEATHERSTRIP SEAL	0.250"x0.345" (ULTRAFAB)	VINYL
29A	BUMPER SPHEAR	0.140"x0.355" (ULTRAFAB)	SILICONE
29B	BUMPER SPHEAR	0.062"x0.25" (ULTRAFAB)	SILICONE
30	SETTING BLOCK	0.122"x0.5" (ULTRAFAB)	E.P.D.M.
31	FIN SEAL PILE W/ PLASTIC	ULTRAFAB	
32	STRUCTURAL SILICONE DOW CORNING 995	ALL AROUND GLASS	SILICONE
33	HINGE FULL MORTISE FIVE KNUCKLE - 4001	4 1/2"x4" MANUFACTURED BY REGENT	S.S
34	MCK-12HD Series Full Mortise Short Leaf Flush	MANUFACTURED BY MCKINNEY PRODUCTS COMPANY	6063-T6
35	HINGES SCREWS	(8) 12-24x1/2" F.H.	STEEL
36	HINGE REINFORCEMENT PLATE	1 1/5"x10"	STEEL
37	NON STRUCTURAL SILICONE DOW CORNING CONTRACTORS CONCRETE SEALANT (CCS)	AS SHOWN	SILICONE
38	MULTI POINT LOCK (ACTIVE SASH) MS 1850S SERIES MS® DEADLOCK + 4015 THRESHOLD BOLT & 4016 HEADER BOLT	MANUFACTURED BY ASSA ABLOY	-
38A	MULTI POINT LOCK (ACTIVE SASH) 3-POINT HOOKBOLT MORTISE LOCK SERIES 2002	MANUFACTURED BY REGENT	-
39	MULTI POINT LOCK (IN-ACTIVE SASH) MS2180 AUTO-RELEASE TWO-POINT FLUSHBOLT	MANUFACTURED BY ASSA ABLOY	-
39A	MULTI POINT LOCK (IN-ACTIVE SASH) 2 POINT LOCK SERIES 2-PT-L	MANUFACTURED BY REGENT	-
40	PANIC DEVICE - AD8400 SERIES CONCEALED VERTICAL ROD EXIT DEVICE FOR ACTIVE & INACTIVE SASH	MANUFACTURED BY ASSA ABLOY	-
40A	PANIC DEVICE - G86 SERIES CONCEALED VERTICAL ROD EXIT DEVICE FOR ACTIVE & INACTIVE SASH	MANUFACTURED BY ASSA ABLOY	-

FLORIDA BUILDING CODE (HIGH & NON HIGH VELOCITY HURRICANE ZONE)

PERFORMANCE COMMERCIAL OUTSWING ENTRANCE DOOR

ALUMINA DISTRIBUTION CENTER
15002 NW. 107 AVE.
HIALEAH GARDENS, FL. 33018
PHONE: (305) 444-1198

F.R.L. DRAWN BY:
06/13/19 DATE:
19-057 DRAWING No.
SHEET 4 OF 33

REV. NO	DESCRIPTION	DATE	REV. No	DESCRIPTION	DATE
1	-	-	3	-	-
2	-	-	4	-	-

©2019 TILTECO, INC.

TILTECO INC.
TILLIT TESTING & ENGINEERING COMPANY
6355 N.W. 36th. St., Ste. 305, VIRGINIA GARDENS, FL 33166
Phone : (305)871-1530 , Fax : (305)871-1531
CA-0006719
WALTER A. TILLIT Jr. P.E.
FLORIDA Lic. # 44167

WALTER A. TILLIT JR. LICENSE No. 44167 STATE OF FLORIDA PROFESSIONAL ENGINEER

SEAL/SIGNATURE/DATE

BILL OF MATERIALS AT DOORS (CONT'D)

DOOR COMPONENT #	TRANSOM COMPONENT #	DESCRIPTION	MATERIAL
AD	A	7/16" NOMINAL LAMINATED GLASS W/ 3/16" H.S. GLASS + 0.090" TROSIFOL PVB INTERLAYER BY KURARAY AMERICA, INC. + 3/16" H.S. GLASS.	GLASS
AD1	A1	1-3/16" NOMINAL INSULATED-LAMINATED GLASS W/ 1/4" TEMPERED GLASS OUT BOARD + 1/2" ARGON SPACER + 3/16" H.S. GLASS + 0.090" TROSIFOL PVB INTERLAYER BY KURARAY AMERICA, INC. + 3/16" H.S. GLASS.	GLASS
BD	B	9/16" NOMINAL LAMINATED GLASS W/ 1/4" H.S. GLASS + 0.090" TROSIFOL PVB INTERLAYER BY KURARAY AMERICA, INC. + 1/4" H.S. GLASS.	GLASS
BD1	-	1 3/16" NOMINAL INSULATED-LAMINATED GLASS W/ 1/4" TEMPERED GLASS OUT BOARD + 3/8" ARGON SPACER + 1/4" H.S. GLASS +0.090" TROSIFOL PVB INTERLAYER BY KURARAY AMERICA, INC. + 1/4" H.S. GLASS.	GLASS
-	B1	1 5/16" NOMINAL INSULATED-LAMINATED GLASS W/ 1/4" TEMPERED GLASS OUT BOARD + 1/2" ARGON SPACER + 1/4" H.S. GLASS +0.090" TROSIFOL PVB INTERLAYER BY KURARAY AMERICA, INC. + 1/4" H.S. GLASS.	GLASS
CD	C	9/16" NOMINAL LAMINATED GLASS W/ 1/4" H.S. GLASS + 0.090" SENTRYGLAS® INTERLAYER BY KURARAY AMERICA, INC. + 1/4" H.S. GLASS.	GLASS
CD1	-	1 3/16" NOMINAL INSULATED-LAMINATED GLASS W/ 1/4" TEMPERED GLASS OUT BOARD + 3/8" ARGON SPACER + 1/4" H.S. GLASS + 0.090" SENTRYGLAS® INTERLAYER BY KURARAY AMERICA, INC. + 1/4" H.S. GLASS.	GLASS
-	C1	1 5/16" NOMINAL INSULATED-LAMINATED GLASS W/ 1/4" TEMPERED GLASS OUT BOARD + 1/2" ARGON SPACER + 1/4" H.S. GLASS + 0.090" SENTRYGLAS® INTERLAYER BY KURARAY AMERICA, INC. + 1/4" H.S. GLASS.	GLASS

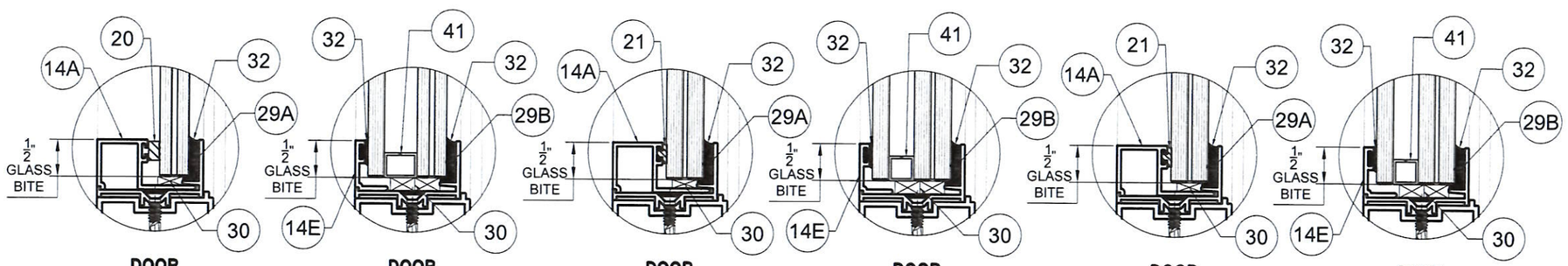

DOOR GLASS TYPE "AD" 7/16 — DOOR GLASS TYPE "AD1" 1-3/16 — DOOR GLASS TYPE "BD" 9/16 — DOOR GLASS TYPE "BD1" 1-3/16 — DOOR GLASS TYPE "CD" 9/16 — DOOR GLASS TYPE "CD1" 1-3/16

GLAZING DETAILS AT DOORS

SCALE 1/2"=1"

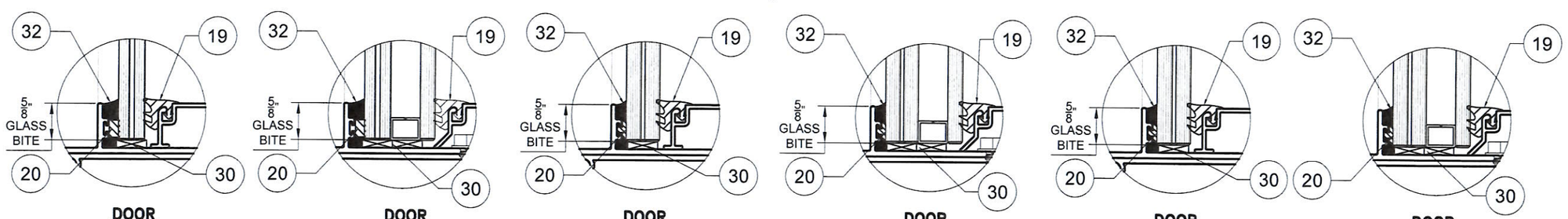

DOOR GLASS TYPE "A" 7/16 — DOOR GLASS TYPE "A1" 1-3/16 — DOOR GLASS TYPE "B" 9/16 — DOOR GLASS TYPE "B1" 1-5/16 — DOOR GLASS TYPE "C" 9/16 — DOOR GLASS TYPE "C1" 1-5/16

GLAZING DETAILS AT TRANSOM

SCALE 1/2"=1"

FLORIDA BUILDING CODE (HIGH & NON HIGH VELOCITY HURRICANE ZONE)

PERFORMANCE COMMERCIAL OUTSWING ENTRANCE DOOR

ALUMINA DISTRIBUTION CENTER
15002 NW. 107 AVE.
HIALEAH GARDENS, FL. 33018
PHONE: (305) 444-1198

REV. NO	DESCRIPTION	DATE	REV. No	DESCRIPTION	DATE
1	-	-	3	-	-
2	-	-	4	-	-

F.R.L. DRAWN BY: 06/13/19 DATE: 19-057 DRAWING No. SHEET 5 OF 33

©2019 TILTECO, INC.

TILTECO INC.
TILLIT TESTING & ENGINEERING COMPANY
6355 N.W. 36th. St., Ste. 305, VIRGINIA GARDENS, FL. 33166
Phone : (305)871-1531 , Fax : (305)871-1531
CA-0006719
WALTER A. TILLIT Jr. P.E.
FLORIDA Lic. # 44167

WALTER A. TILLIT JR. LICENSE No. 44167 STATE OF FLORIDA PROFESSIONAL ENGINEER

P.E. SEAL/SIGNATURE/DATE

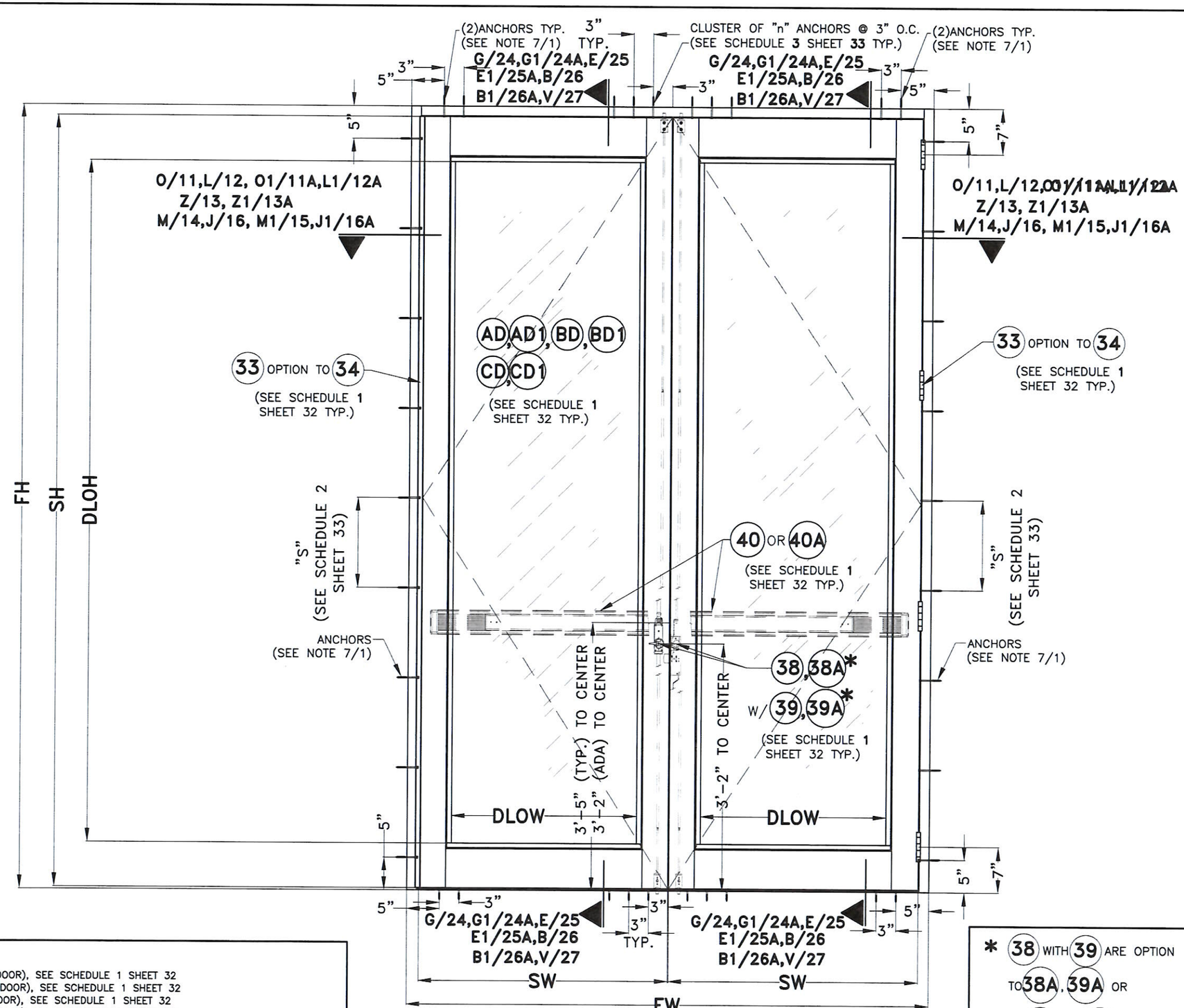

TYPICAL EXTERIOR ELEVATION CASE I (DOUBLE DOOR)

N.T.S.

LEGEND:

- **FW=** FRAME WIDTH (DOUBLE DOOR), SEE SCHEDULE 1 SHEET 32
- **FH=** FRAME HEIGHT (DOUBLE DOOR), SEE SCHEDULE 1 SHEET 32
- **SW=** SASH WIDTH (DOUBLE DOOR), SEE SCHEDULE 1 SHEET 32
- **SH=** SASH HEIGHT (DOUBLE DOOR), SEE SCHEDULE 1 SHEET 32
- **DLOW=** DAY LIGHT OPENING WIDTH (DOUBLE DOOR), SEE SCHEDULE 1 SHEET 32
- **DLOH=** DAY LIGHT OPENING HEIGHT (DOUBLE DOOR), SEE SCHEDULE 1 SHEET 32

* 38 WITH 39 ARE OPTION TO 38A, 39A OR TO 40 OR 40A (SEE SCHEDULE 1 SHEET 32)

FLORIDA BUILDING CODE (HIGH & NON HIGH VELOCITY HURRICANE ZONE)

PERFORMANCE COMMERCIAL OUTSWING ENTRANCE DOOR

ALUMINA DISTRIBUTION CENTER
15002 NW. 107 AVE.
HIALEAH GARDENS, FL. 33018
PHONE: (305) 444-1198

REV. NO	DESCRIPTION	DATE	REV. No	DESCRIPTION	DATE
1	-	-	3	-	-
2	-	-	4	-	-

F.R.L. DRAWN BY: | 06/13/19 DATE: | 19-057 DRAWING No. | SHEET 6 OF 33

©2019 TILTECO, INC.

TILTECO INC.
TILLIT TESTING & ENGINEERING COMPANY
6355 N.W. 36th. St., Ste. 305, VIRGINA GARDENS, FL 33166
Phone : (305)871-1530 , Fax : (305)871-1531
CA-0006719
WALTER A. TILLIT Jr. P.E.
FLORIDA Lic. # 44167

WALTER A. TILLIT JR. LICENSE No. 44167 STATE OF FLORIDA PROFESSIONAL ENGINEER

SEAL/SIGNATURE/DATE

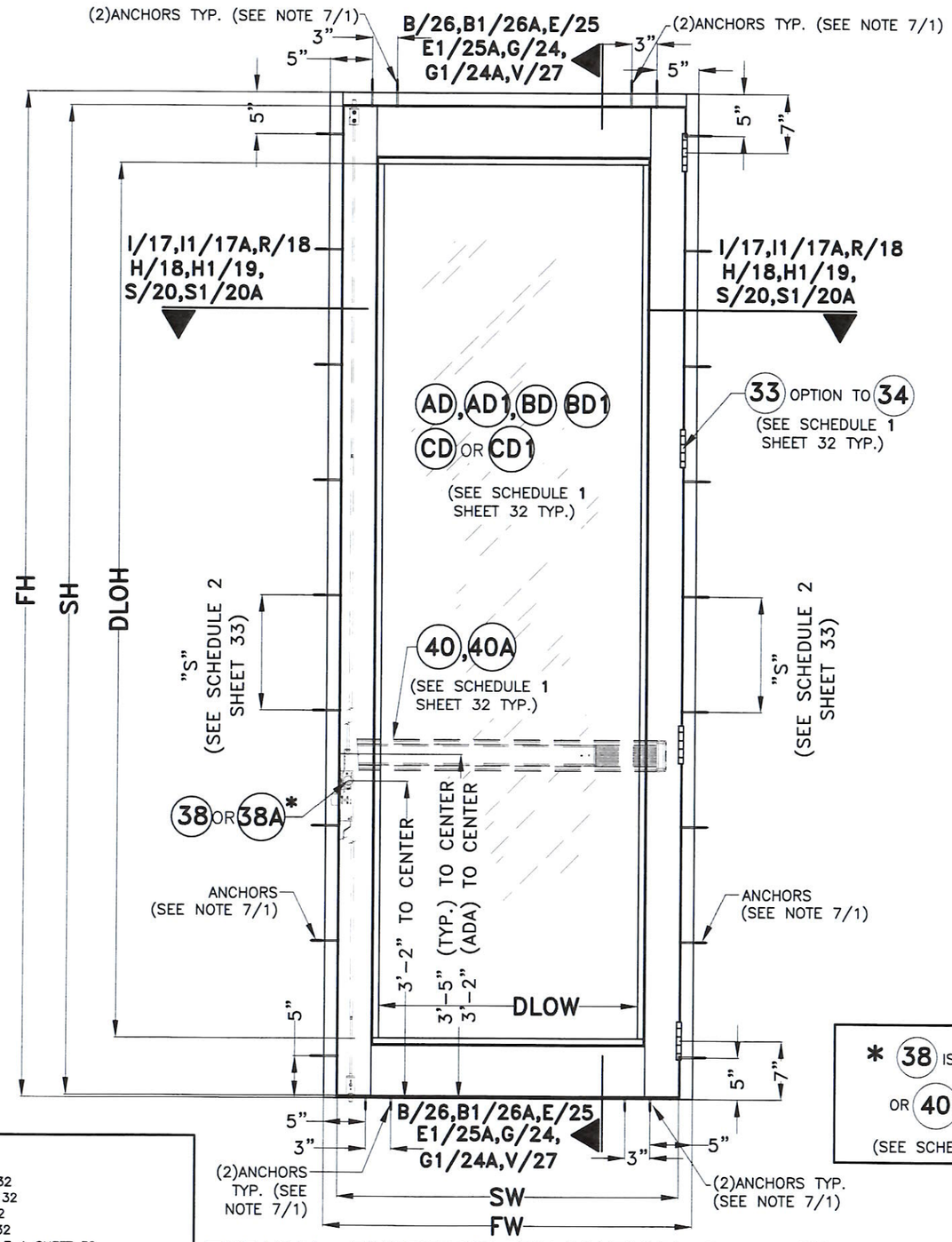

* 38 IS OPTION TO 38A
OR 40 OR 40A
(SEE SCHEDULE 1 SHEET 32)

LEGEND:

FW=	FRAME WIDTH (SINGLE DOOR), SEE SCHEDULE 1 SHEET 32
FH=	FRAME HEIGHT (SINGLE DOOR), SEE SCHEDULE 1 SHEET 32
SW=	SASH WIDTH (SINGLE DOOR), SEE SCHEDULE 1 SHEET 32
SH=	SASH HEIGHT (SINGLE DOOR), SEE SCHEDULE 1 SHEET 32
DLOW=	DAY LIGHT OPENING WIDTH (SINGLE DOOR), SEE SCHEDULE 1 SHEET 32
DLOH=	DAY LIGHT OPENING HEIGHT (SINGLE DOOR), SEE SCHEDULE 1 SHEET 32

TYPICAL EXTERIOR ELEVATION CASE II (SINGLE DOOR)

N.T.S.

FLORIDA BUILDING CODE (HIGH & NON HIGH VELOCITY HURRICANE ZONE)

PERFORMANCE COMMERCIAL OUTSWING ENTRANCE DOOR

ALUMINA DISTRIBUTION CENTER
15002 NW. 107 AVE.
HIALEAH GARDENS, FL. 33018
PHONE: (305) 444-1198

F.R.L.
DRAWN BY:

06/13/19
DATE:

19-057
DRAWING No.

SHEET 7 OF 33

REV. NO	DESCRIPTION	DATE	REV. No	DESCRIPTION	DATE
1	-	-	3	-	-
2	-	-	4	-	-

©2019 TILTECO, INC.

TILTECO INC.
TILLIT TESTING & ENGINEERING COMPANY
6355 N.W. 36th. St., Ste. 305, VIRGINIA GARDENS, FL. 33166
Phone : (305)871-1530 . Fax : (305)871-1531
CA-0006719
WALTER A. TILLIT Jr. P.E.
FLORIDA Lic. # 44167

WALTER A. TILLIT JR. ★ LICENSE No. 44167 ★ STATE OF FLORIDA ★ PROFESSIONAL ENGINEER

SEAL/SIGNATURE/DATE

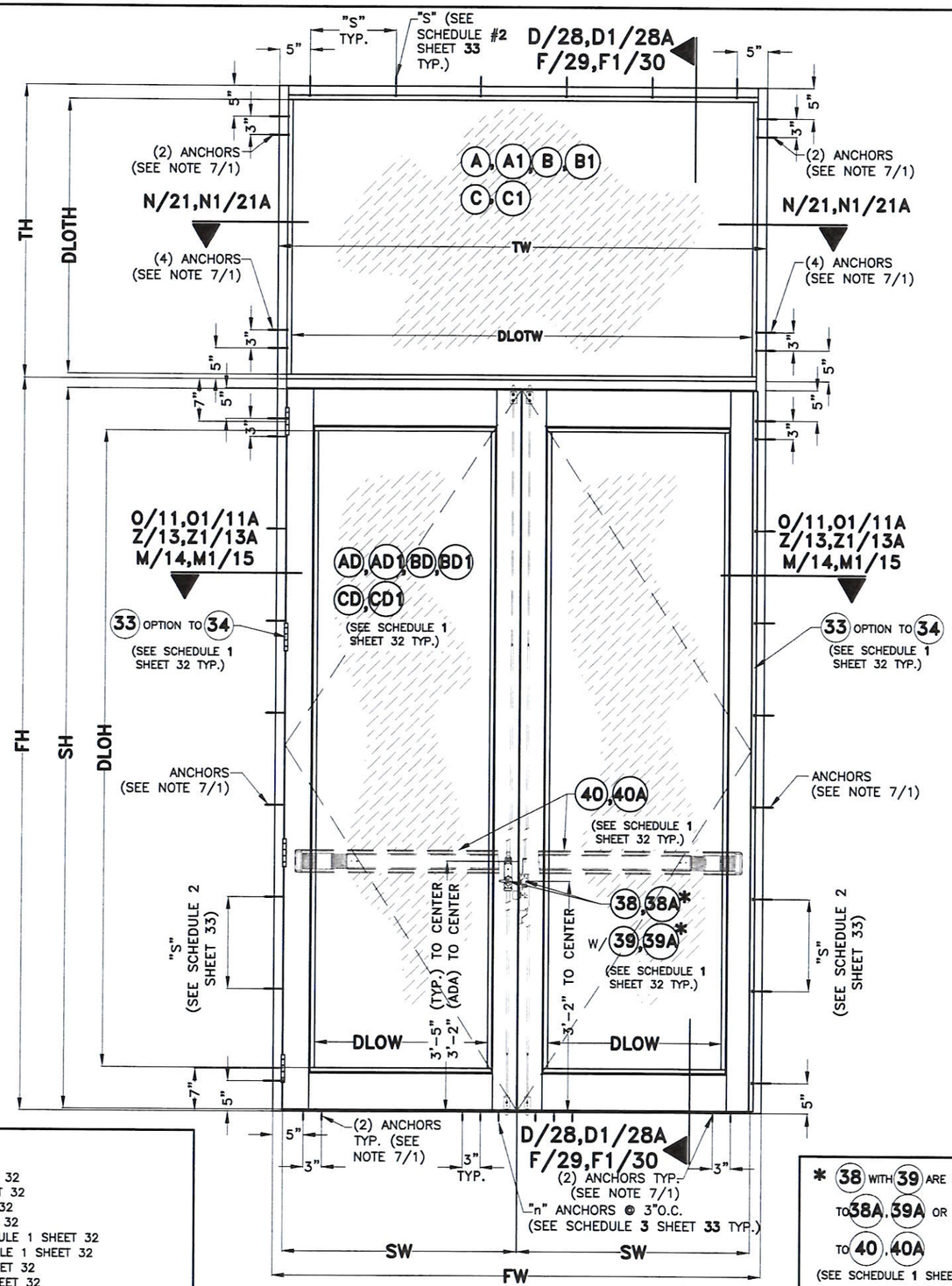

LEGEND:

- **FW=** FRAME WIDTH (DOUBLE DOOR), SEE SCHEDULE 1 SHEET 32
- **FH=** FRAME HEIGHT (DOUBLE DOOR), SEE SCHEDULE 1 SHEET 32
- **SW=** SASH WIDTH (DOUBLE DOOR), SEE SCHEDULE 1 SHEET 32
- **SH=** SASH HEIGHT (DOUBLE DOOR), SEE SCHEDULE 1 SHEET 32
- **DLOW=** DAY LIGHT OPENING WIDTH (DOUBLE DOOR), SEE SCHEDULE 1 SHEET 32
- **DLOH=** DAY LIGHT OPENING HEIGHT (DOUBLE DOOR)SEE SCHEDULE 1 SHEET 32
- **TW=** TRANSOM WIDTH (DOUBLE DOOR), SEE SCHEDULE 1 SHEET 32
- **TH=** TRANSOM HEIGHT (DOUBLE DOOR), SEE SCHEDULE 1 SHEET 32
- **DLOTW=** DAY LIGHT OPENING TRANSOM HEIGHT (DOUBLE DOOR), SEE SCHEDULE 1 SHEET 32
- **DLOTH=** DAY LIGHT OPENING TRANSOM WIDTH (DOUBLE DOOR), SEE SCHEDULE 1 SHEET 32

* 38 WITH 39 ARE OPTION TO 38A, 39A OR TO 40, 40A (SEE SCHEDULE 1 SHEET 32 TYP.)

TYPICAL EXTERIOR ELEVATION CASE IIIa (DOUBLE DOOR W/ TRANSOM)

N.T.S.

FLORIDA BUILDING CODE (HIGH & NON HIGH VELOCITY HURRICANE ZONE)

PERFORMANCE COMMERCIAL OUTSWING ENTRANCE DOOR

ALUMINA DISTRIBUTION CENTER
15002 NW. 107 AVE.
HIALEAH GARDENS, FL. 33018
PHONE: (305) 444-1198

F.R.L. DRAWN BY:
06/13/19 DATE:
19-057 DRAWING No.
SHEET 8 OF 33

REV. NO	DESCRIPTION	DATE	REV. No	DESCRIPTION	DATE
1	-	-	3	-	-
2	-	-	4	-	-

©2019 TILTECO, INC.

TILTECO INC.
TILLIT TESTING & ENGINEERING COMPANY
6355 N.W. 36th. St., Ste. 305, VIRGINIA GARDENS, FL. 33166
Phone : (305)871-1530 , Fax : (305)871-1531
CA-0006719
WALTER A. TILLIT Jr. P.E.
FLORIDA Lic. # 44167

WALTER A. TILLIT JR. LICENSE No. 44167 STATE OF FLORIDA PROFESSIONAL ENGINEER

SEAL/SIGNATURE/DATE

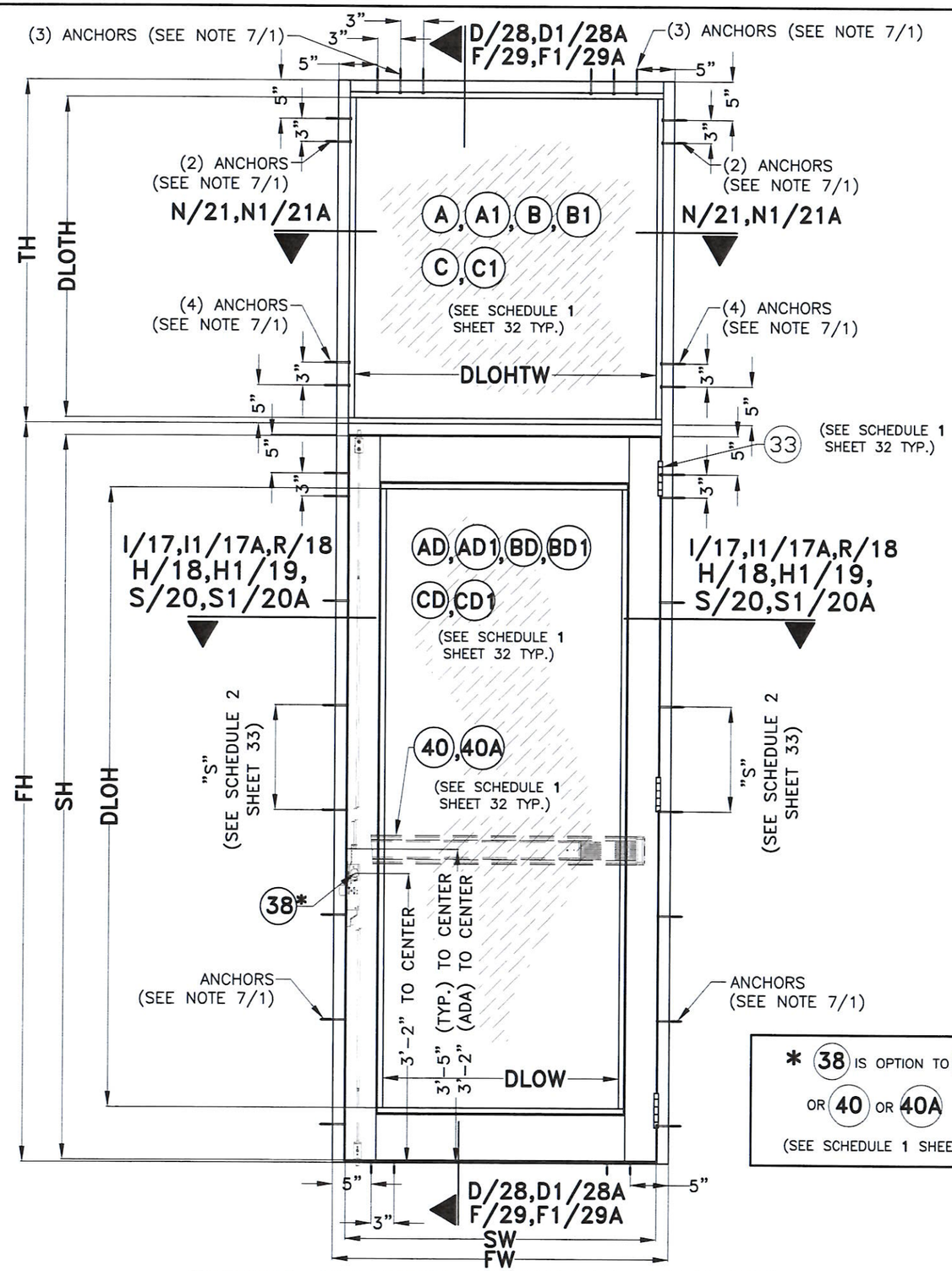

LEGEND:

- FW= FRAME WIDTH (SINGLE DOOR), SEE SCHEDULE 1 SHEET 32
- FH= FRAME HEIGHT (SINGLE DOOR), SEE SCHEDULE 1 SHEET 32
- SW= SASH WIDTH (SINGLE DOOR), SEE SCHEDULE 1 SHEET 32
- SH= SASH HEIGHT (SINGLE DOOR), SEE SCHEDULE 1 SHEET 32
- DLOW= DAY LIGHT OPENING WIDTH (SINGLE DOOR), SEE SCHEDULE 1 SHEET 32
- DLOH= DAY LIGHT OPENING HEIGHT (SINGLE DOOR)SEE SCHEDULE 1 SHEET 32
- TW= TRANSOM WIDTH (SINGLE DOOR), SEE SCHEDULE 1 SHEET 32
- TH= TRANSOM HEIGHT (SINGLE DOOR), SEE SCHEDULE 1 SHEET 32
- DLOTW= DAY LIGHT OPENING TRANSOM HEIGHT (SINGLE DOOR), SEE SCHEDULE 1 SHEET 32
- DLOTH= DAY LIGHT OPENING TRANSOM WIDTH (SINGLE DOOR), SEE SCHEDULE 1 SHEET 32

* 38 IS OPTION TO 38A OR 40 OR 40A (SEE SCHEDULE 1 SHEET 32)

TYPICAL EXTERIOR ELEVATION CASE IIIb (SINGLE DOOR W/ TRANSOM)

N.T.S.

FLORIDA BUILDING CODE (HIGH & NON HIGH VELOCITY HURRICANE ZONE)

PERFORMANCE COMMERCIAL OUTSWING ENTRANCE DOOR

ALUMINA DISTRIBUTION CENTER
15002 NW. 107 AVE.
HIALEAH GARDENS, FL. 33018
PHONE: (305) 444-1198

F.R.L. DRAWN BY:
06/13/19 DATE:
19-057 DRAWING No.
SHEET 9 OF 33

REV. NO	DESCRIPTION	DATE	REV. No	DESCRIPTION	DATE
1	-	-	3	-	-
2	-	-	4	-	-

©2019 TILTECO, INC.

TILTECO INC.
TILLIT TESTING & ENGINEERING COMPANY
6355 N.W. 36th. St., Ste. 305, VIRGINIA GARDENS, FL 33166
Phone : (305)871-1530 , Fax : (305)871-1531
CA-0006719
WALTER A. TILLIT Jr. P.E.
FLORIDA Lic. # 44167

SEAL/SIGNATURE/DATE

WALTER A. TILLIT JR. LICENSE No. 44167 STATE OF FLORIDA PROFESSIONAL ENGINEER

6/13/19

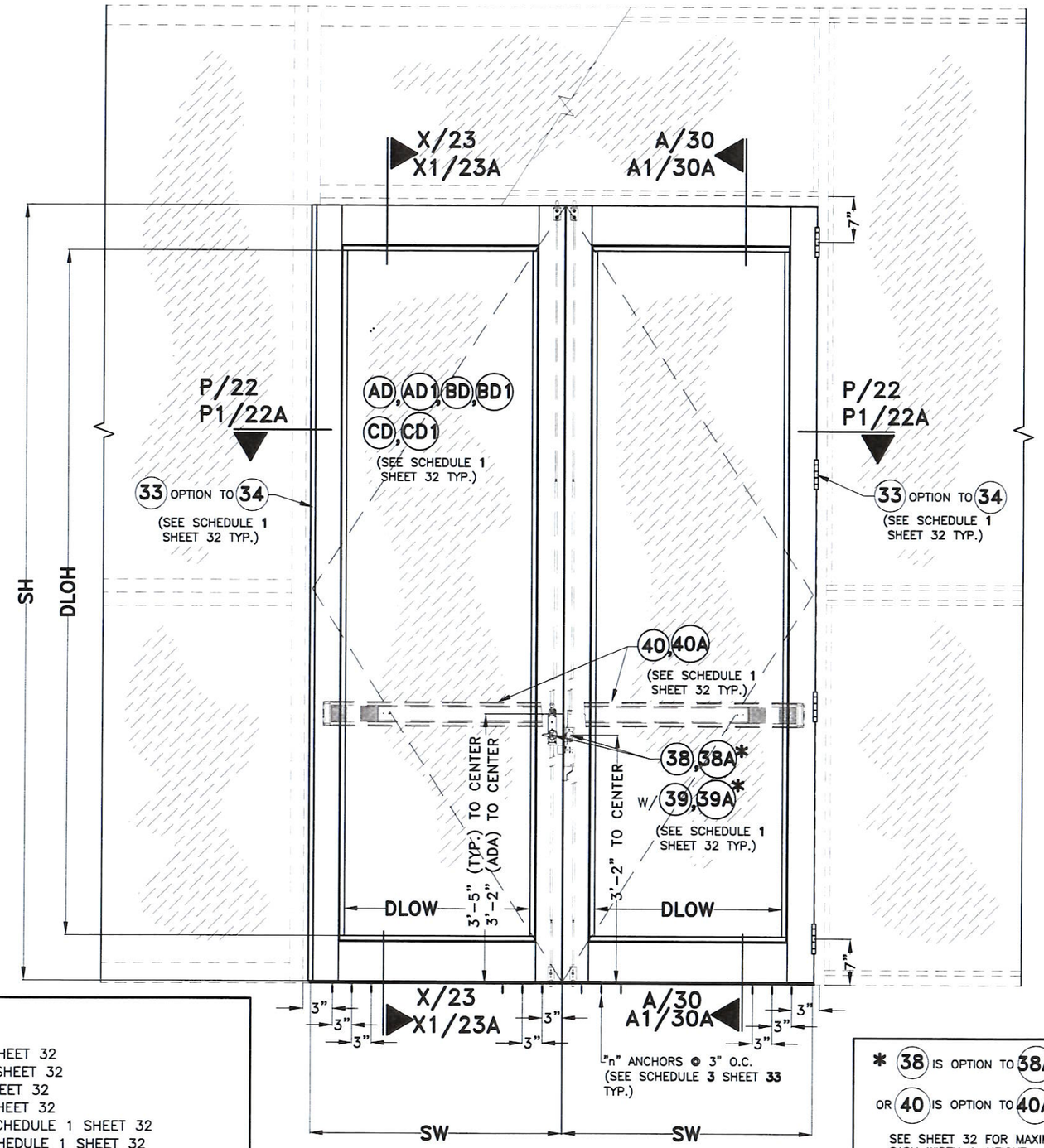

TYPICAL EXTERIOR ELEVATION CASE IV (SINGLE OR DOUBLE DOOR W/ STOREFRONT PER SCHEDULE 1 SHEET 32)

N.T.S.

LEGEND:

FW= FRAME WIDTH (DOUBLE & SINGLE DOOR), SEE SCHEDULE 1 SHEET 32
FH= FRAME HEIGHT (DOUBLE & SINGLE DOOR), SEE SCHEDULE 1 SHEET 32
SW= SASH WIDTH (DOUBLE & SINGLE DOOR), SEE SCHEDULE 1 SHEET 32
SH= SASH HEIGHT (DOUBLE & SINGLE DOOR), SEE SCHEDULE 1 SHEET 32
DLOW= DAY LIGHT OPENING WIDTH (DOUBLE & SINGLE DOOR), SEE SCHEDULE 1 SHEET 32
DLOH= DAY LIGHT OPENING HEIGHT (DOUBLE & SINGLE DOOR)SEE SCHEDULE 1 SHEET 32
TW= TRANSOM WIDTH (DOUBLE & SINGLE DOOR), SEE SCHEDULE 1 SHEET 32
TH= TRANSOM HEIGHT (DOUBLE & SINGLE DOOR), SEE SCHEDULE 1 SHEET 32
DLOTW= DAY LIGHT OPENING TRANSOM HEIGHT (DOUBLE & SINGLE DOOR), SEE SCHEDULE 1 SHEET 32
DLOTH= DAY LIGHT OPENING TRANSOM WIDTH (DOUBLE & SINGLE DOOR), SEE SCHEDULE 1 SHEET 32

* 38 IS OPTION TO 38A
OR 40 IS OPTION TO 40A
SEE SHEET 32 FOR MAXIMUM SASH WIDTH & HEIGHT

FLORIDA BUILDING CODE (HIGH & NON HIGH VELOCITY HURRICANE ZONE)

PERFORMANCE COMMERCIAL OUTSWING ENTRANCE DOOR

ALUMINA DISTRIBUTION CENTER
15002 NW. 107 AVE.
HIALEAH GARDENS, FL. 33018
PHONE: (305) 444-1198

F.R.L. DRAWN BY:
06/13/19 DATE:
19-057 DRAWING No.
SHEET 10 OF 33

REV. NO	DESCRIPTION	DATE	REV. No	DESCRIPTION	DATE
1	-	-	3	-	-
2	-	-	4	-	-

©2019 TILTECO, INC.

TILTECO INC.
TILLIT TESTING & ENGINEERING COMPANY
6355 N.W. 36th. St., Ste. 305, VIRGINIA GARDENS, FL. 33166
Phone : (305)871-1530 . Fax : (305)871-1531
CA-0006719
WALTER A. TILLIT Jr. P.E.
FLORIDA Lic. # 44167

WALTER A. TILLIT JR. LICENSE No. 44167 STATE OF FLORIDA PROFESSIONAL ENGINEER

6/12/19

P.E. SEAL/SIGNATURE/DATE

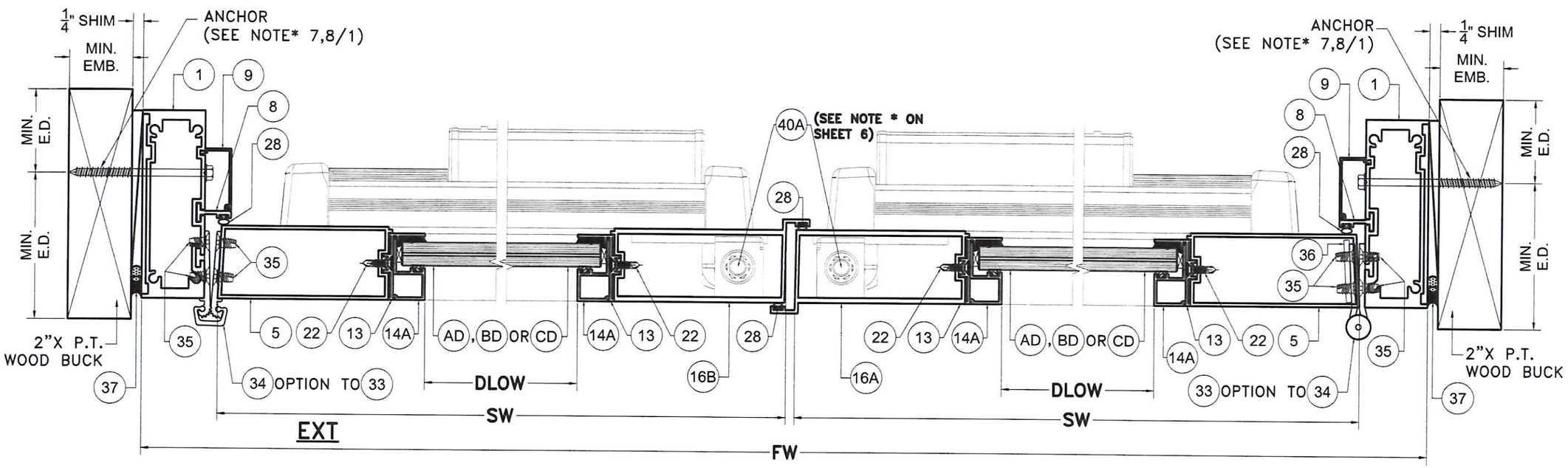

WOOD SUBSTRATE

SECTION O–O

SCALE 3/8"=1"

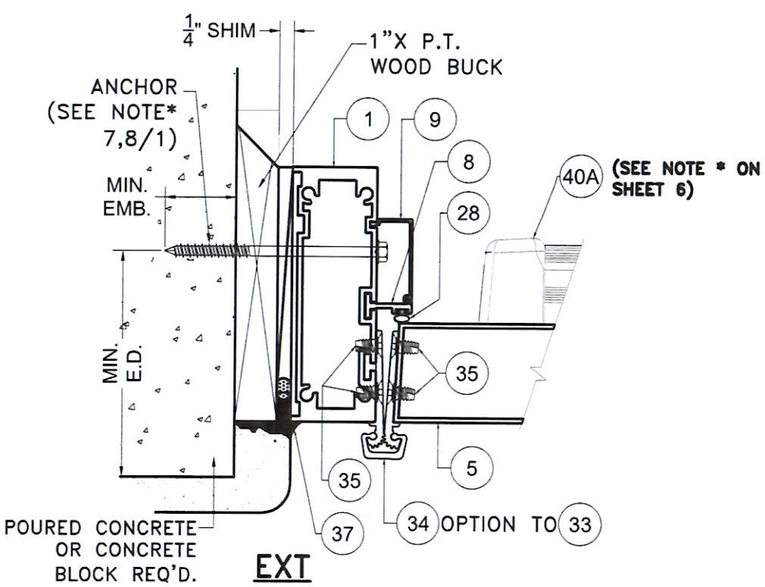

POURED CONCRETE/ CONCRETE BLOCK SUBSTRATE

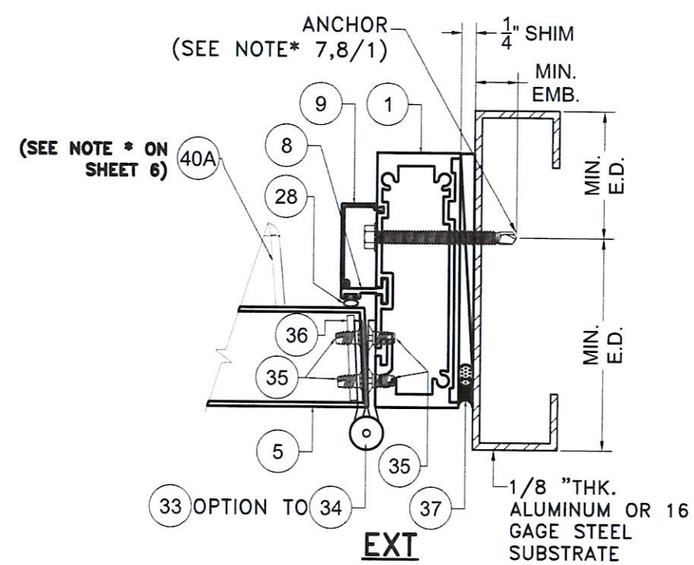

ALUMINUM / STEEL MEMBER SUBSTRATE

FLORIDA BUILDING CODE (HIGH & NON HIGH VELOCITY HURRICANE ZONE)

PERFORMANCE COMMERCIAL OUTSWING ENTRANCE DOOR

ALUMINA DISTRIBUTION CENTER
15002 NW. 107 AVE.
HIALEAH GARDENS, FL. 33018
PHONE: (305) 444-1198

REV. NO	DESCRIPTION	DATE	REV. No	DESCRIPTION	DATE
1	-	-	3	-	-
2	-	-	4	-	-

F.R.L. DRAWN BY:
06/13/19 DATE:
19-057 DRAWING No.
SHEET 11 OF 33

©2019 TILTECO, INC.

TILTECO INC.
TILLIT TESTING & ENGINEERING COMPANY
6355 N.W. 36th. St., Ste. 305, VIRGINA GARDENS, FL 33166
Phone : (305)871-1530 , Fax : (305)871-1531
CA-0006719
WALTER A. TILLIT Jr. P.E.
FLORIDA Lic. # 44167

WALTER A. TILLIT JR. LICENSE No. 44167 STATE OF FLORIDA PROFESSIONAL ENGINEER

SEAL/SIGNATURE/DATE

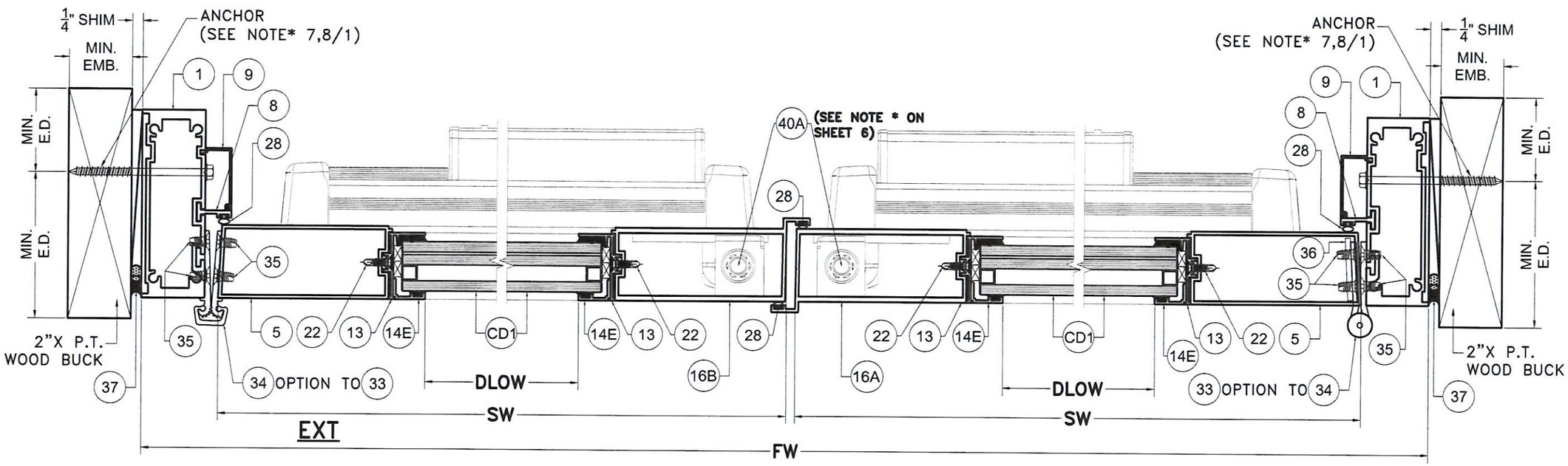

WOOD SUBSTRATE

SECTION 01–01

SCALE 3/8"=1"

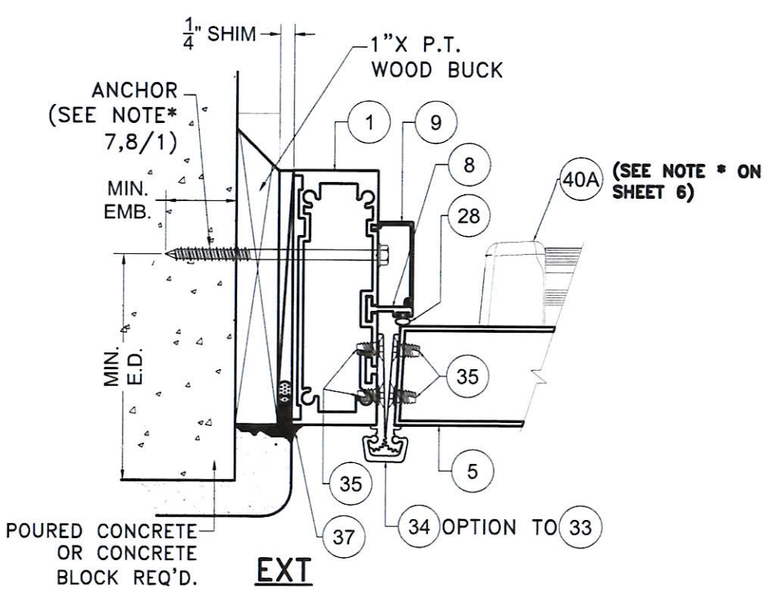

POURED CONCRETE/ CONCRETE BLOCK SUBSTRATE

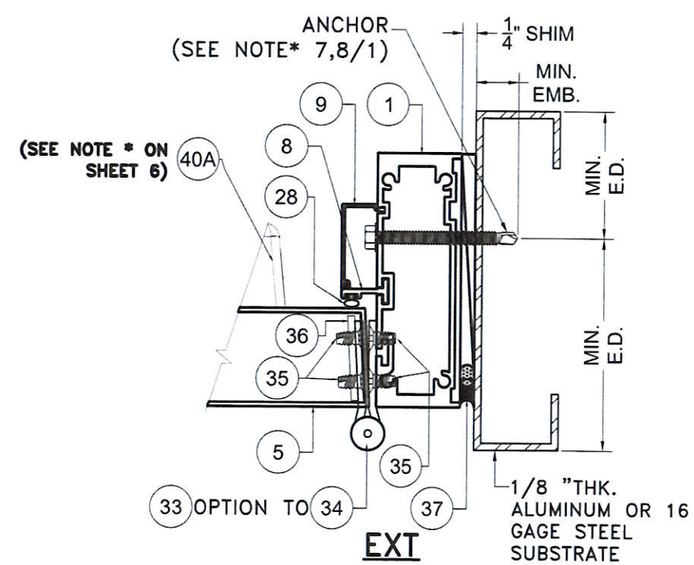

ALUMINUM / STEEL MEMBER SUBSTRATE

FLORIDA BUILDING CODE (HIGH & NON HIGH VELOCITY HURRICANE ZONE)

PERFORMANCE COMMERCIAL OUTSWING ENTRANCE DOOR

ALUMINA DISTRIBUTION CENTER
15002 NW. 107 AVE.
HIALEAH GARDENS, FL. 33018
PHONE: (305) 444–1198

F.R.L. DRAWN BY:
06/13/19 DATE:
19–057 DRAWING No.
SHEET 11A OF 33

REV. NO	DESCRIPTION	DATE	REV. No	DESCRIPTION	DATE
1	-	-	3	-	-
2	-	-	4	-	-

©2019 TILTECO, INC.

TILTECO INC.
TILLIT TESTING & ENGINEERING COMPANY
6355 N.W. 36th. St., Ste. 305, VIRGINA GARDENS, FL. 33166
Phone : (305)871–1530 , Fax : (305)871–1531
CA–0006719
WALTER A. TILLIT Jr. P.E.
FLORIDA Lic. # 44167

SEAL/SIGNATURE/DATE

WALTER A. TILLIT JR. LICENSE No. 44167 STATE OF FLORIDA PROFESSIONAL ENGINEER

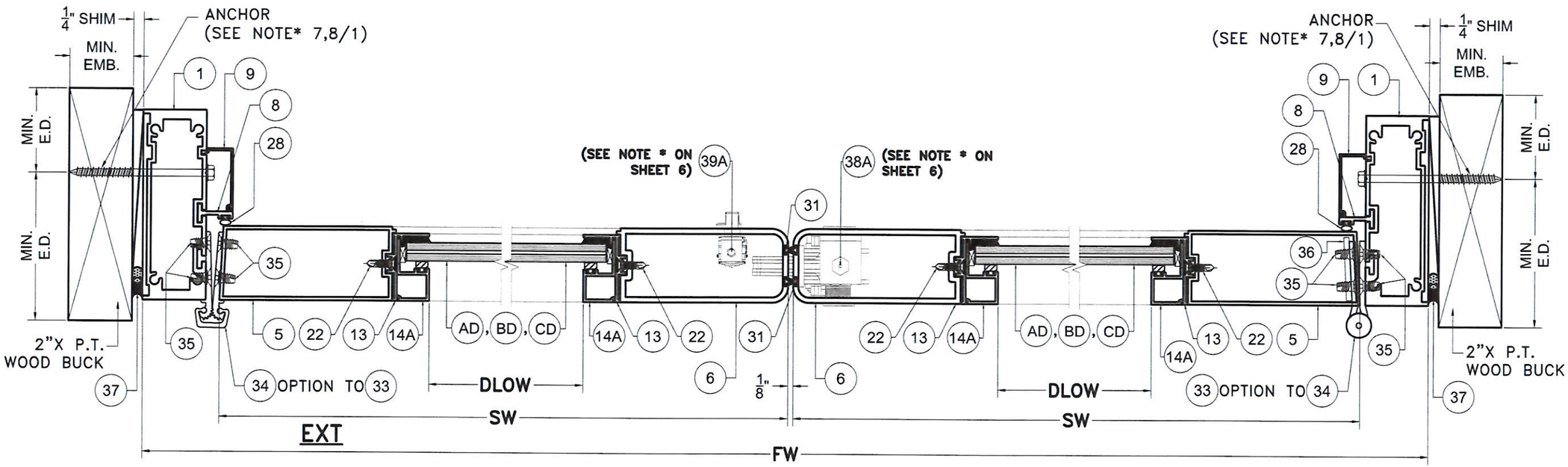

WOOD SUBSTRATE

SECTION L–L

SCALE 3/8"=1"

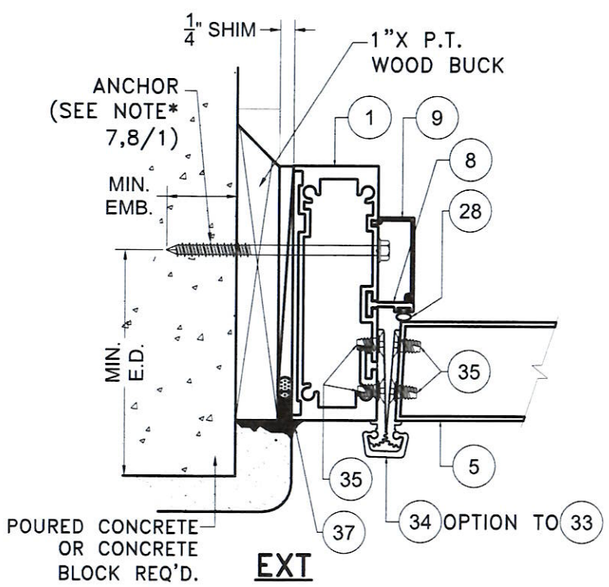

POURED CONCRETE/ CONCRETE BLOCK SUBSTRATE

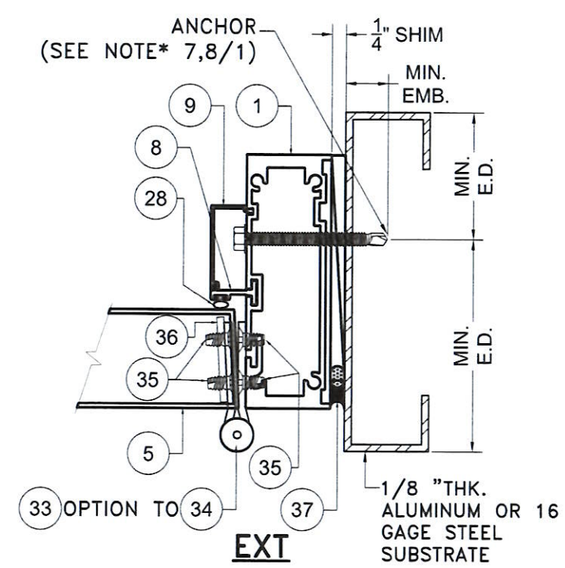

ALUMINUM / STEEL MEMBER SUBSTRATE

FLORIDA BUILDING CODE (HIGH & NON HIGH VELOCITY HURRICANE ZONE)

PERFORMANCE COMMERCIAL OUTSWING ENTRANCE DOOR

ALUMINA DISTRIBUTION CENTER
15002 NW. 107 AVE.
HIALEAH GARDENS, FL. 33018
PHONE: (305) 444-1198

F.R.L. DRAWN BY:
06/13/19 DATE:
19-057 DRAWING No.
SHEET 12 OF 33

REV. NO	DESCRIPTION	DATE	REV. No	DESCRIPTION	DATE
1	-	-	3	-	-
2	-	-	4	-	-

©2019 TILTECO, INC.

TILTECO INC.
TILLIT TESTING & ENGINEERING COMPANY
6355 N.W. 36th. St., Ste. 305, VIRGINIA GARDENS, FL. 33166
Phone : (305)871-1530 , Fax : (305)871-1531
CA-0006719
WALTER A. TILLIT Jr. P.E.
FLORIDA Lic. # 44167

SIGN/SEAL/SIGNATURE/DATE

WALTER A. TILLIT JR. LICENSE No. 44167 STATE OF FLORIDA PROFESSIONAL ENGINEER

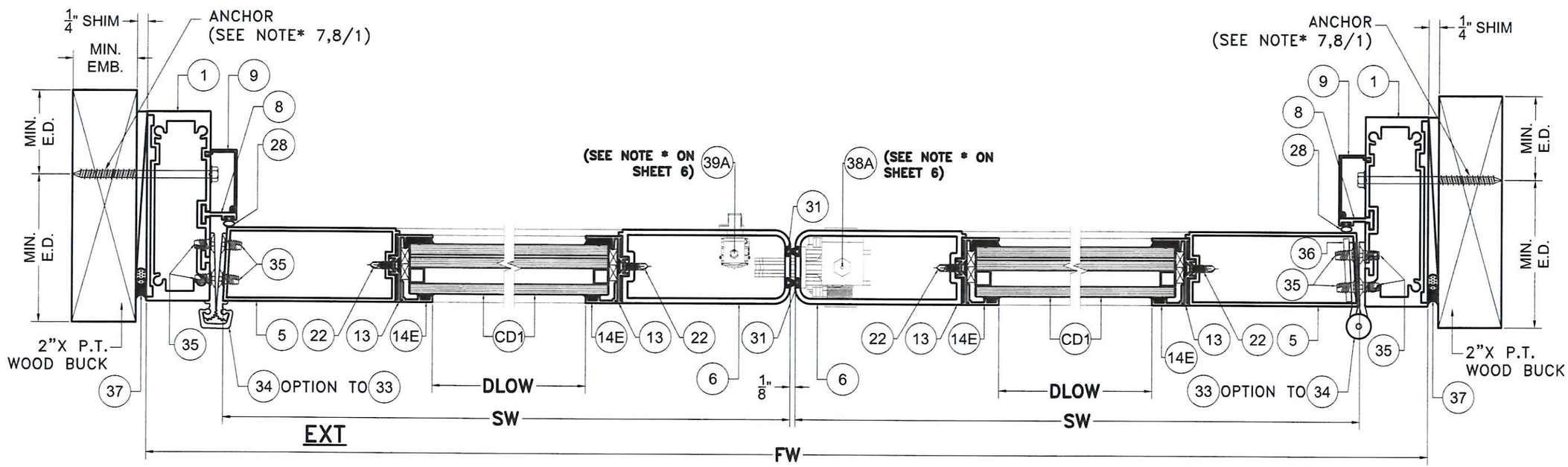

WOOD SUBSTRATE

SECTION L1–L1

SCALE 3/8"=1"

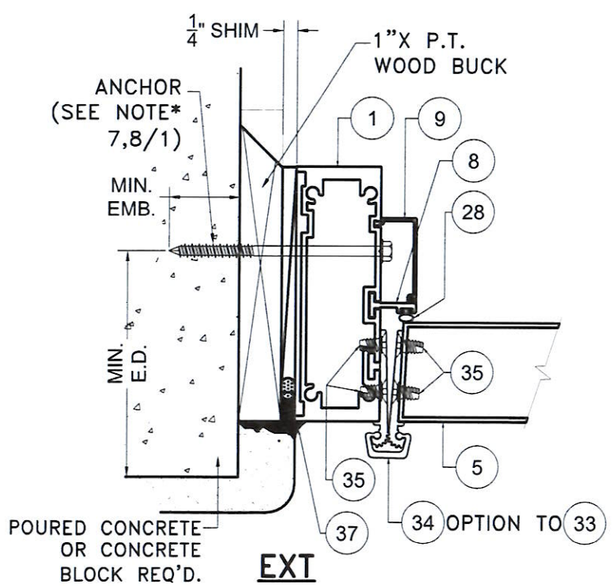

POURED CONCRETE/ CONCRETE BLOCK SUBSTRATE

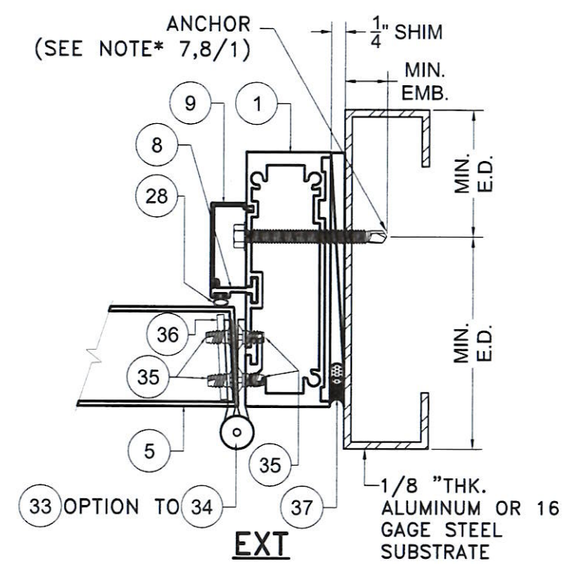

ALUMINUM / STEEL MEMBER SUBSTRATE

FLORIDA BUILDING CODE (HIGH & NON HIGH VELOCITY HURRICANE ZONE)

PERFORMANCE COMMERCIAL OUTSWING ENTRANCE DOOR

ALUMINA DISTRIBUTION CENTER
15002 NW. 107 AVE.
HIALEAH GARDENS, FL. 33018
PHONE: (305) 444-1198

F.R.L. DRAWN BY:
06/13/19 DATE:
19-057 DRAWING No.
SHEET 12A OF 33

REV. NO	DESCRIPTION	DATE	REV. No	DESCRIPTION	DATE
1	-	-	3	-	-
2	-	-	4	-	-

©2019 TILTECO, INC.

TILTECO INC.
TILLIT TESTING & ENGINEERING COMPANY
6355 N.W. 36th. St., Ste. 305, VIRGINA GARDENS, FL. 33166
Phone : (305)871-1530 , Fax : (305)871-1531
CA-00006719
WALTER A. TILLIT Jr. P.E.
FLORIDA Lic. # 44167

WALTER A. TILLIT JR. LICENSE No. 44167 STATE OF FLORIDA PROFESSIONAL ENGINEER

6/17/19

P.E. SEAL/SIGNATURE/DATE

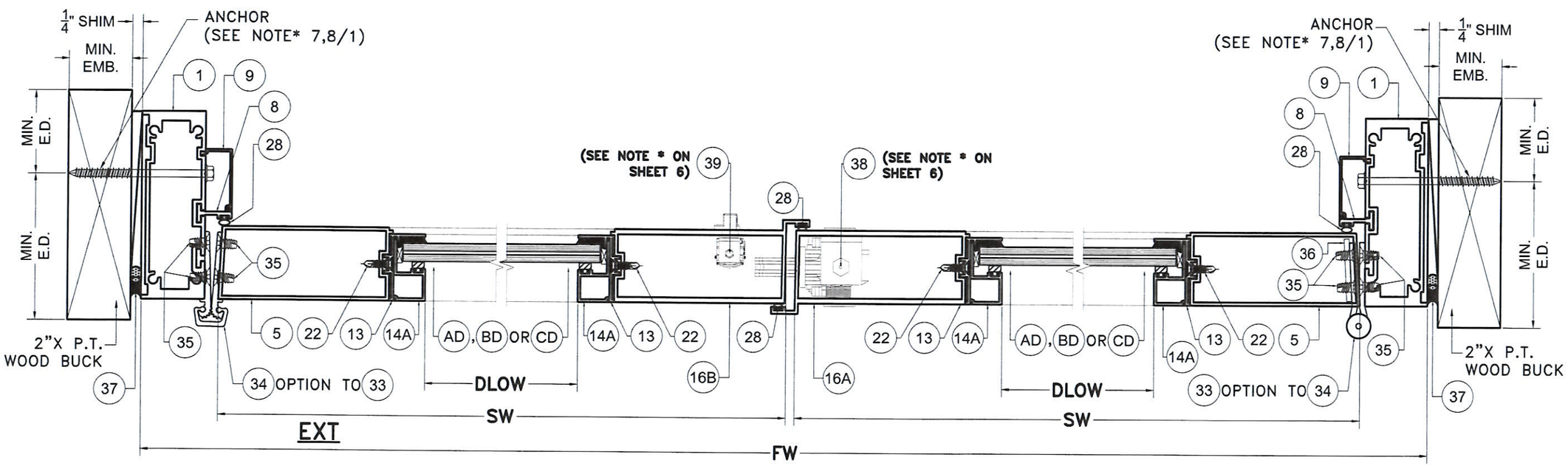

WOOD SUBSTRATE

SECTION Z–Z

SCALE 3/8"=1"

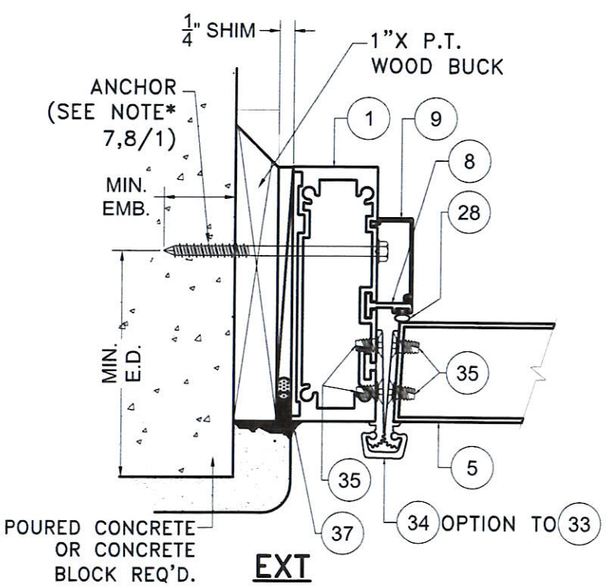

POURED CONCRETE/ CONCRETE BLOCK SUBSTRATE

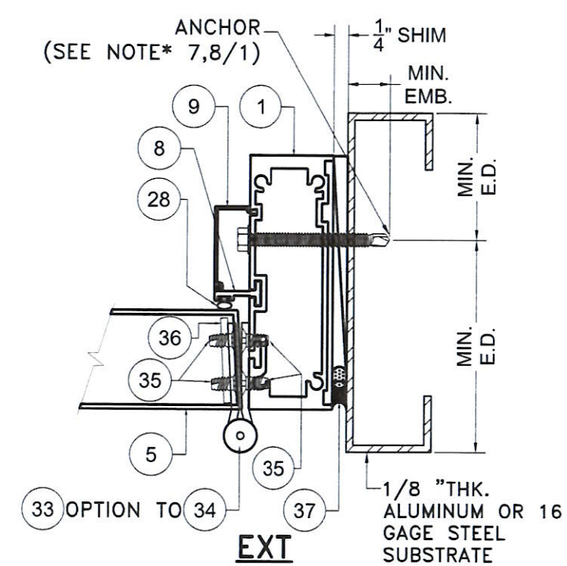

ALUMINUM / STEEL MEMBER SUBSTRATE

FLORIDA BUILDING CODE (HIGH & NON HIGH VELOCITY HURRICANE ZONE)

PERFORMANCE COMMERCIAL OUTSWING ENTRANCE DOOR

ALUMINA DISTRIBUTION CENTER
15002 NW. 107 AVE.
HIALEAH GARDENS, FL. 33018
PHONE: (305) 444-1198

F.R.L. DRAWN BY:
06/13/19 DATE:
19-057 DRAWING No.
SHEET 13 OF 33

REV. NO	DESCRIPTION	DATE	REV. No	DESCRIPTION	DATE
1	-	-	3	-	-
2	-	-	4	-	-

©2019 TILTECO, INC.

TILTECO INC.
TILLIT TESTING & ENGINEERING COMPANY
6355 N.W. 36th. St., Ste. 305, VIRGINIA GARDENS, FL. 33166
Phone : (305)871-1530 , Fax : (305)871-1531
CA-0006719
WALTER A. TILLIT Jr. P.E.
FLORIDA Lic. # 44167

SEAL/SIGNATURE/DATE

WALTER A. TILLIT JR. LICENSE No. 44167 STATE OF FLORIDA PROFESSIONAL ENGINEER

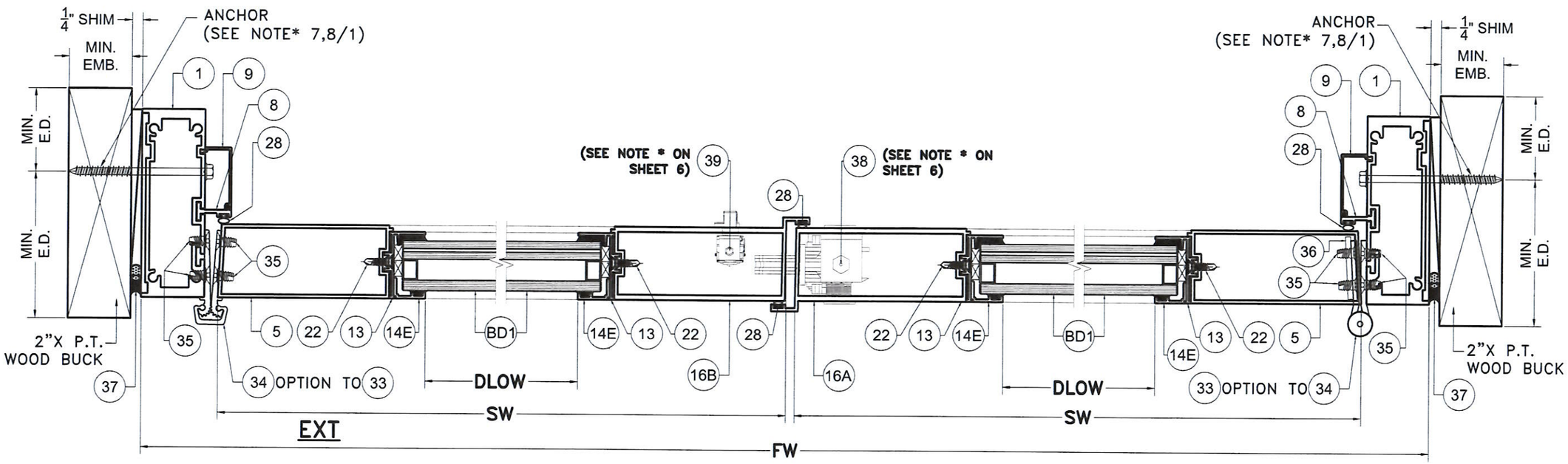

WOOD SUBSTRATE

SECTION Z1–Z1

SCALE 3/8"=1"

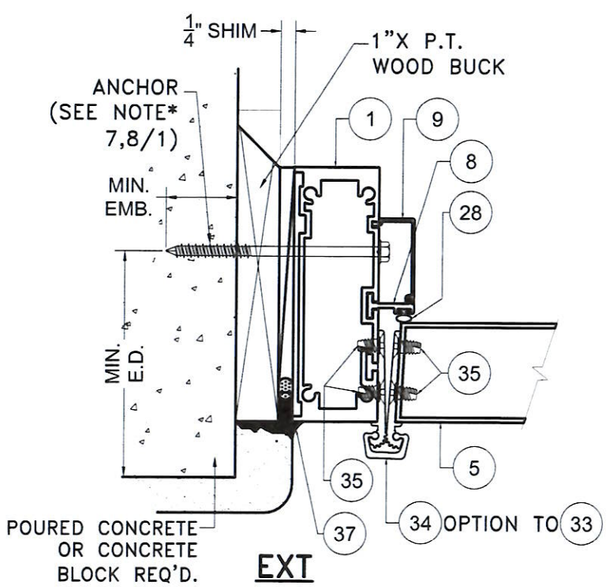

POURED CONCRETE/ CONCRETE BLOCK SUBSTRATE

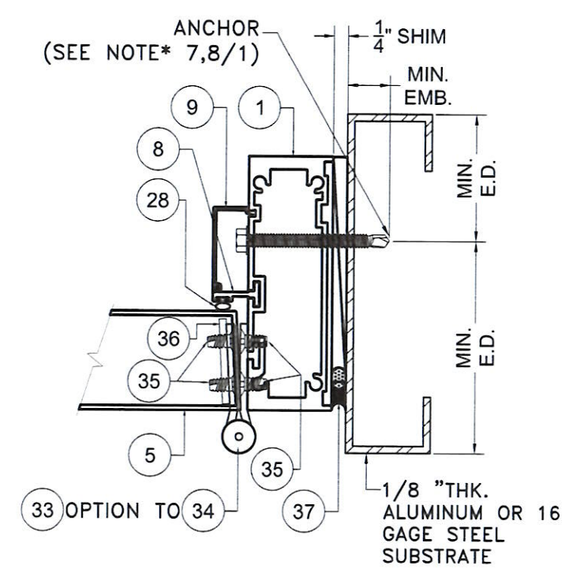

ALUMINUM / STEEL MEMBER SUBSTRATE

FLORIDA BUILDING CODE (HIGH & NON HIGH VELOCITY HURRICANE ZONE)

PERFORMANCE COMMERCIAL OUTSWING ENTRANCE DOOR

ALUMINA DISTRIBUTION CENTER
15002 NW. 107 AVE.
HIALEAH GARDENS, FL. 33018
PHONE: (305) 444-1198

F.R.L. DRAWN BY:
06/13/19 DATE:
19-057 DRAWING No.
SHEET 13A OF 33

REV. NO	DESCRIPTION	DATE	REV. No	DESCRIPTION	DATE
1	-	-	3	-	-
2	-	-	4	-	-

©2019 TILTECO, INC.

TILTECO INC.
TILLIT TESTING & ENGINEERING COMPANY
6355 N.W. 36th. St., Ste. 305, VIRGINIA GARDENS, Fl. 33166
Phone : (305)871-1530 . Fax : (305)871-1531
CA-0006719
WALTER A. TILLIT Jr. P.E.
FLORIDA Lic. # 44167

SEAL/SIGNATURE/DATE

WALTER A. TILLIT JR. LICENSE No. 44167 STATE OF FLORIDA PROFESSIONAL ENGINEER

6/13/19

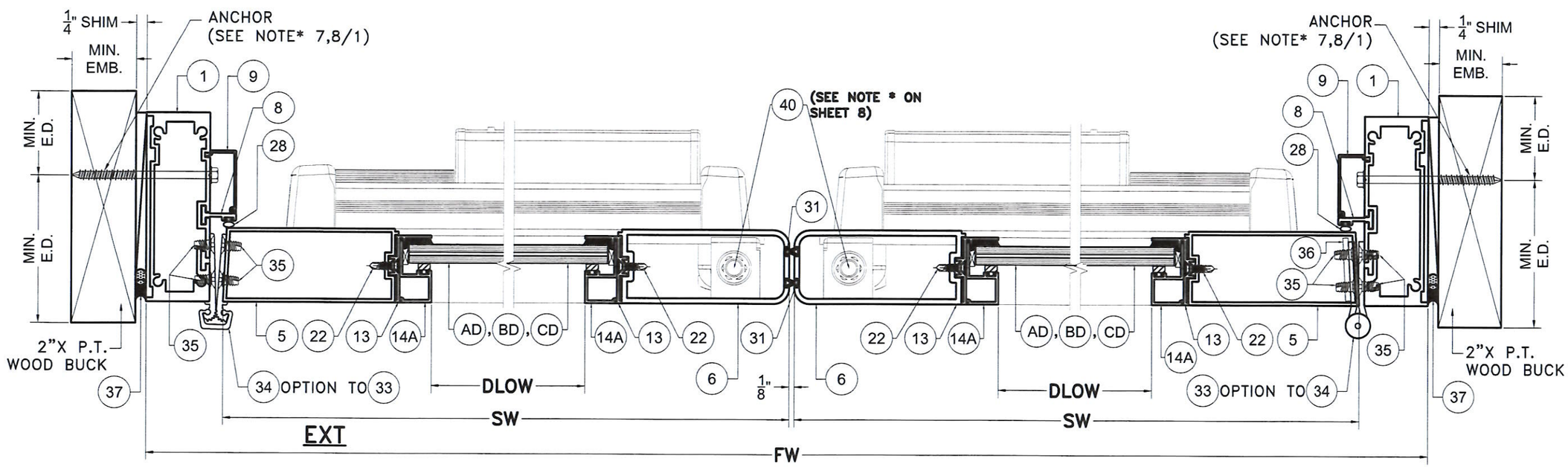

WOOD SUBSTRATE

SECTION M–M

SCALE 3/8"=1"

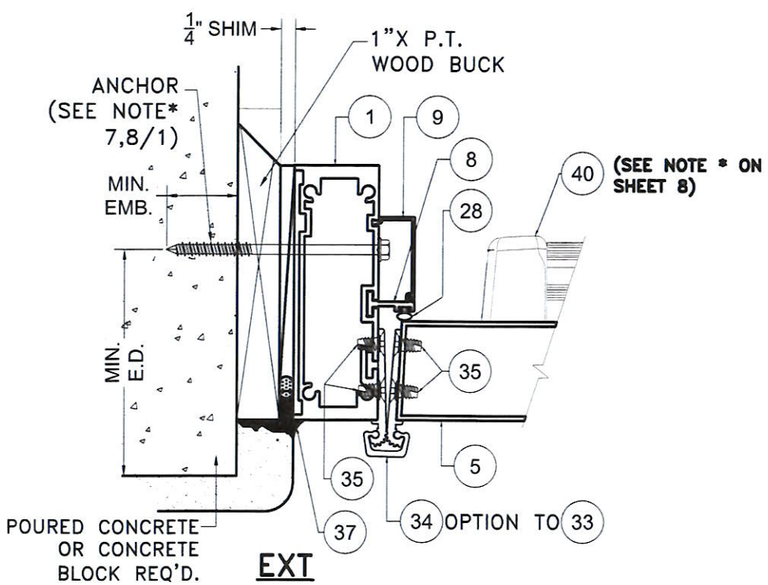

POURED CONCRETE/ CONCRETE BLOCK SUBSTRATE

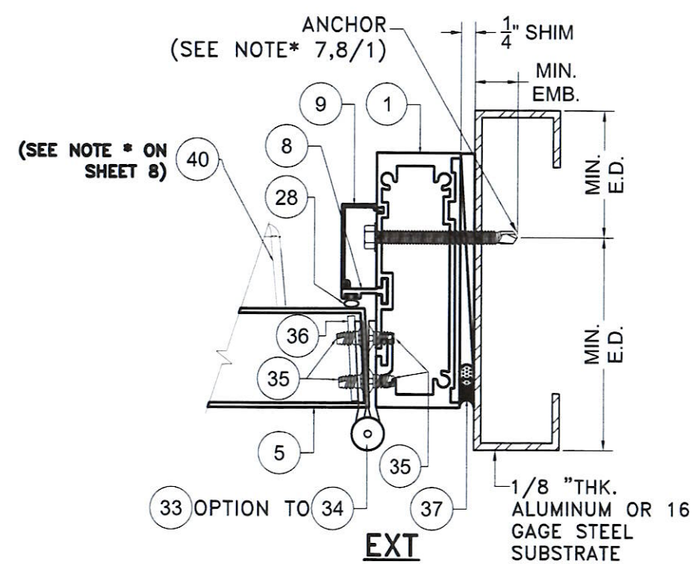

ALUMINUM / STEEL MEMBER SUBSTRATE

FLORIDA BUILDING CODE (HIGH & NON HIGH VELOCITY HURRICANE ZONE)

PERFORMANCE COMMERCIAL OUTSWING ENTRANCE DOOR

ALUMINA DISTRIBUTION CENTER
15002 NW. 107 AVE.
HIALEAH GARDENS, FL. 33018
PHONE: (305) 444-1198

REV. NO	DESCRIPTION	DATE	REV. No	DESCRIPTION	DATE
1	-	-	3	-	-
2	-	-	4	-	-

F.R.L. DRAWN BY:
06/13/19 DATE:
19-057 DRAWING No.
SHEET 14 OF 33

©2019 TILTECO, INC.

TILTECO INC.
TILLIT TESTING & ENGINEERING COMPANY
6355 N.W. 36th. St., Ste. 305, VIRGINIA GARDENS, FL 33166
Phone : (305)871-1530 , Fax : (305)871-1531
CA-0006719
WALTER A. TILLIT Jr. P.E.
FLORIDA Lic. # 44167

P.E. SEAL/SIGNATURE/DATE

WALTER A. TILLIT JR. LICENSE No. 44167 STATE OF FLORIDA PROFESSIONAL ENGINEER

6/17/19

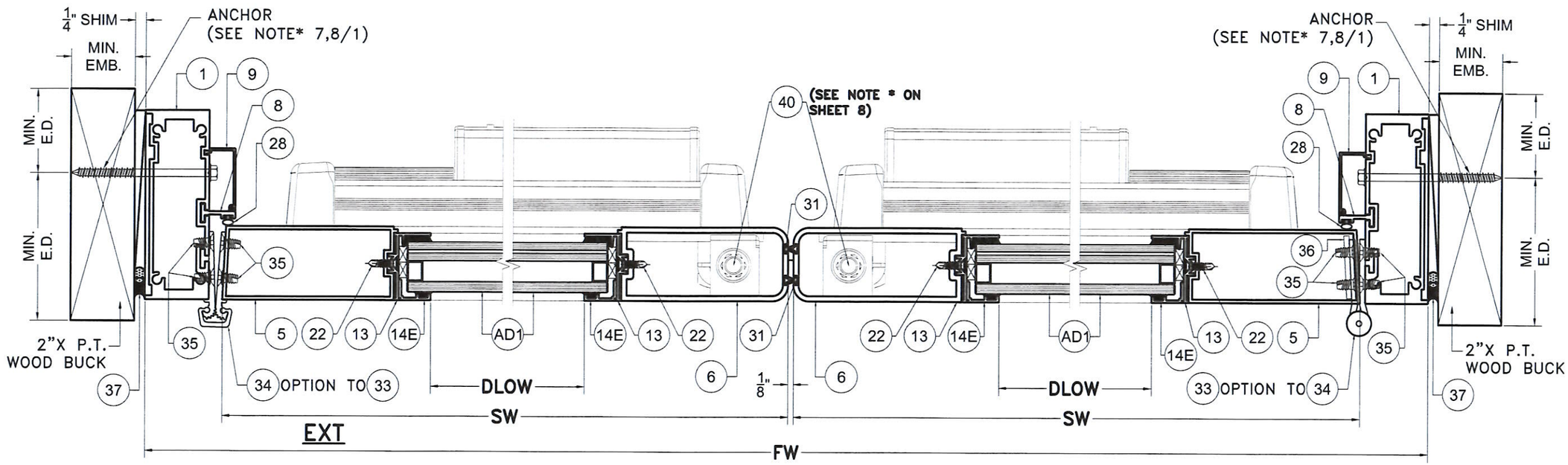

WOOD SUBSTRATE

SECTION M1–M1

SCALE 3/8"=1"

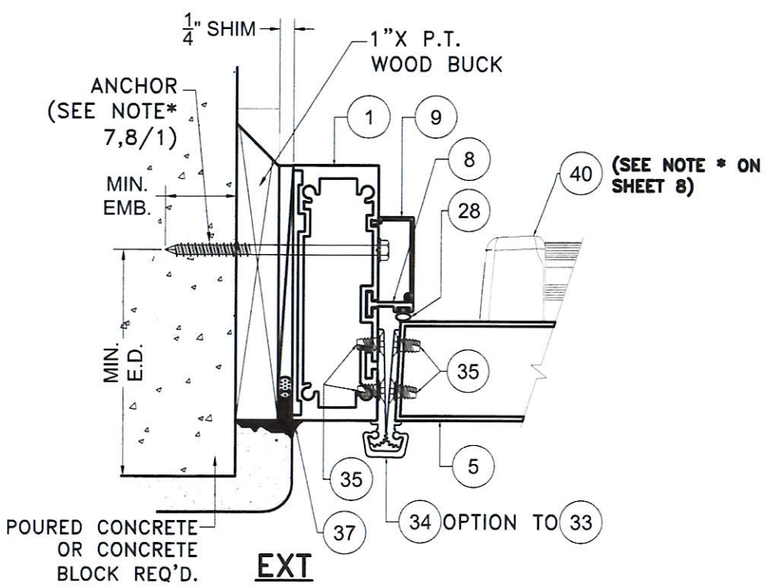

POURED CONCRETE/ CONCRETE BLOCK SUBSTRATE

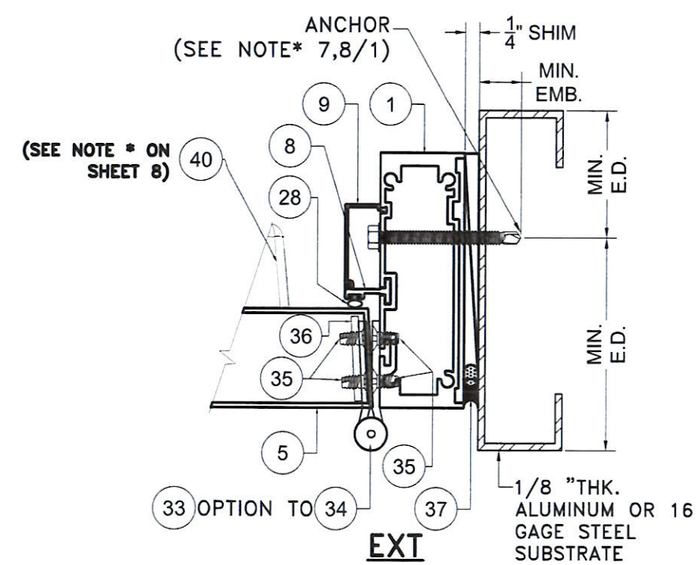

ALUMINUM / STEEL MEMBER SUBSTRATE

FLORIDA BUILDING CODE (HIGH & NON HIGH VELOCITY HURRICANE ZONE)

PERFORMANCE COMMERCIAL OUTSWING ENTRANCE DOOR

ALUMINA DISTRIBUTION CENTER
15002 NW. 107 AVE.
HIALEAH GARDENS, FL. 33018
PHONE: (305) 444-1198

REV. NO	DESCRIPTION	DATE	REV. No	DESCRIPTION	DATE
1	-	-	3	-	-
2	-	-	4	-	-

F.R.L. DRAWN BY:
06/13/19 DATE:
19–057 DRAWING No.
SHEET 15 OF 33

©2019 TILTECO, INC.

TILTECO INC.
TILLIT TESTING & ENGINEERING COMPANY
6355 N.W. 36th. St., Ste. 305, VIRGINIA GARDENS, FL 33166
Phone : (305)871-1530 . Fax : (305)871-1531
CA-0006719
WALTER A. TILLIT Jr. P.E.
FLORIDA Lic. # 44167

WALTER A. TILLIT JR. LICENSE No. 44167 STATE OF FLORIDA PROFESSIONAL ENGINEER

SEAL/SIGNATURE/DATE

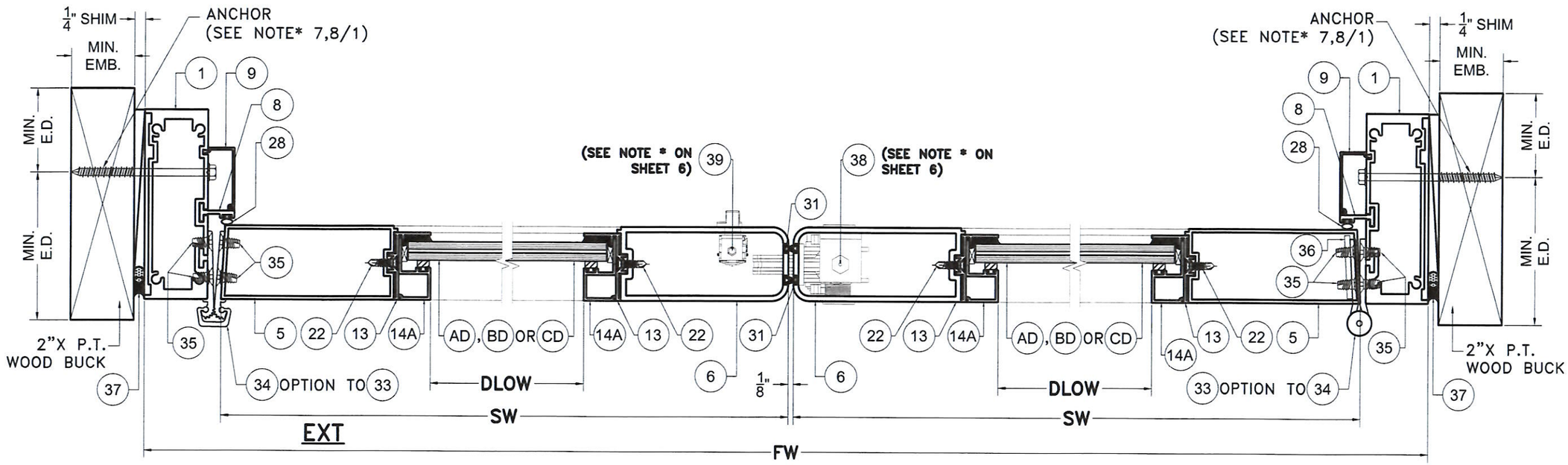

WOOD SUBSTRATE

SECTION J–J

SCALE 3/8"=1"

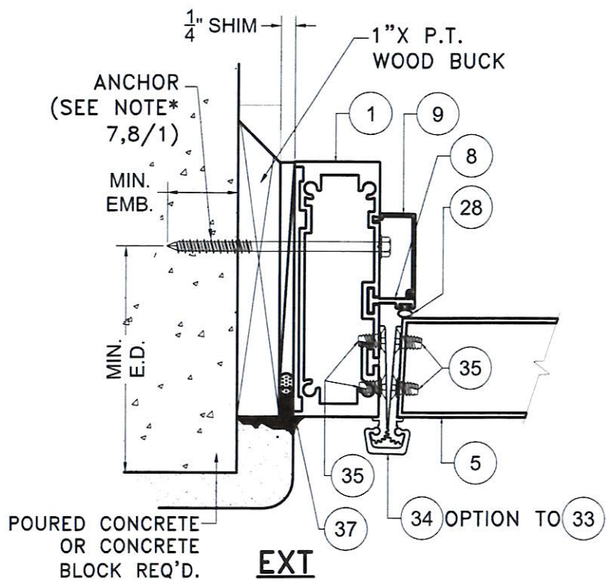

POURED CONCRETE/ CONCRETE BLOCK SUBSTRATE

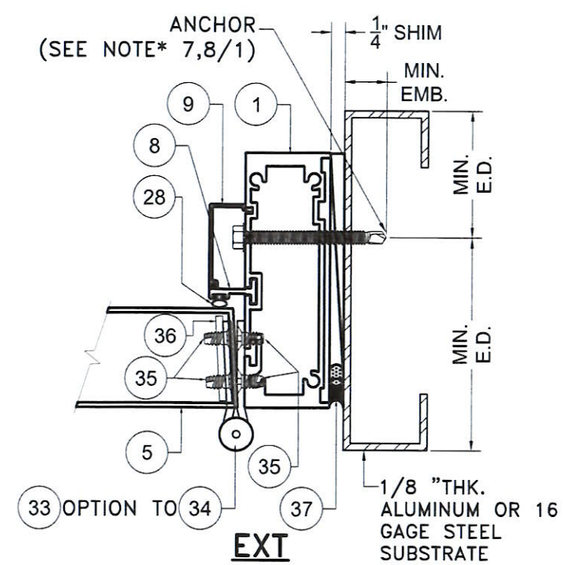

ALUMINUM / STEEL MEMBER SUBSTRATE

FLORIDA BUILDING CODE (HIGH & NON HIGH VELOCITY HURRICANE ZONE)

PERFORMANCE COMMERCIAL OUTSWING ENTRANCE DOOR

ALUMINA DISTRIBUTION CENTER
15002 NW. 107 AVE.
HIALEAH GARDENS, FL. 33018
PHONE: (305) 444-1198

F.R.L. DRAWN BY:
06/13/19 DATE:
19-057 DRAWING No.
SHEET 16 OF 33

REV. NO	DESCRIPTION	DATE	REV. No	DESCRIPTION	DATE
1	-	-	3	-	-
2	-	-	4	-	-

©2019 TILTECO, INC.

TILTECO INC.
TILLIT TESTING & ENGINEERING COMPANY
6355 N.W. 36th. St., Ste. 305, VIRGINIA GARDENS, FL. 33166
Phone : (305)871-1530 , Fax : (305)871-1531
CA-0006719
WALTER A. TILLIT Jr. P.E.
FLORIDA Lic. # 44167

WALTER A. TILLIT JR. LICENSE No. 44167 STATE OF FLORIDA PROFESSIONAL ENGINEER

P.E. SEAL/SIGNATURE/DATE

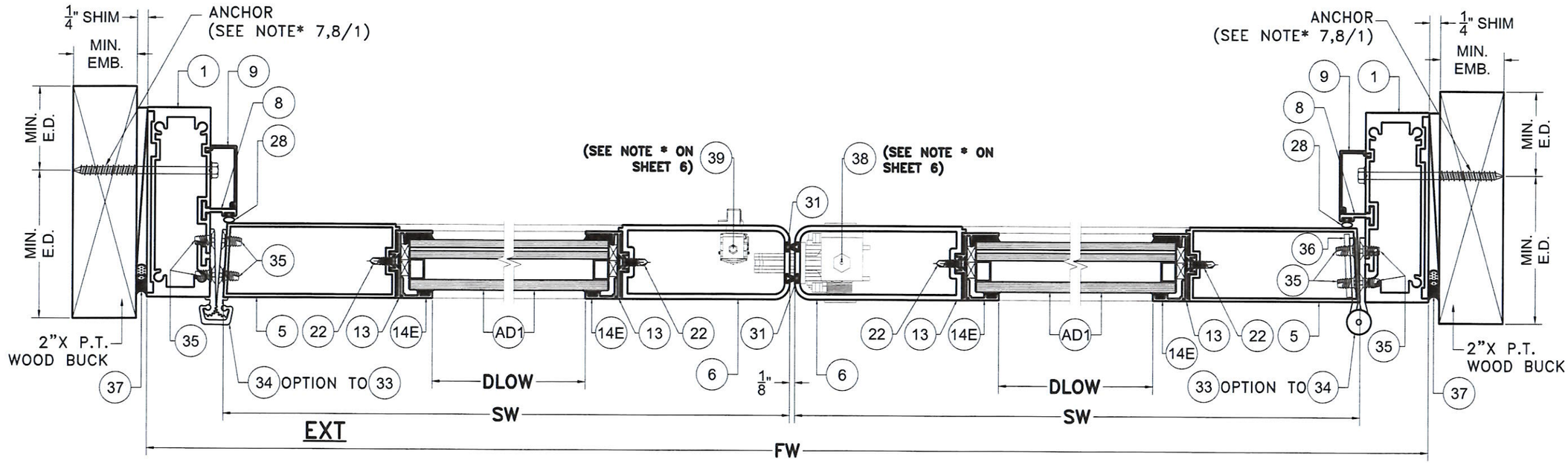

WOOD SUBSTRATE

SECTION J1–J1

SCALE 3/8"=1"

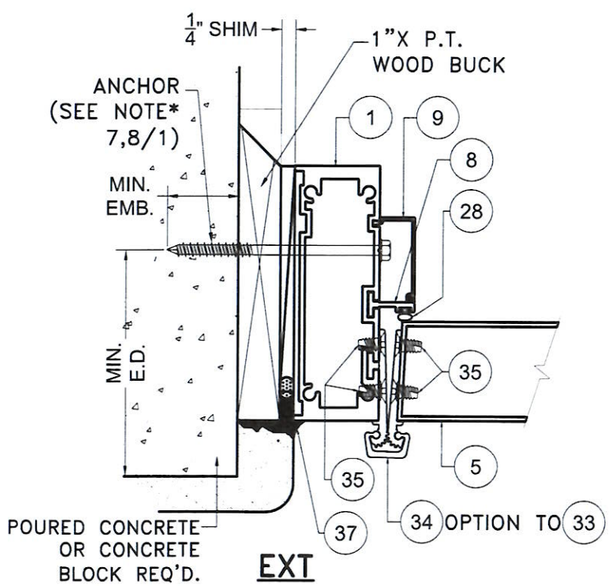

POURED CONCRETE/ CONCRETE BLOCK SUBSTRATE

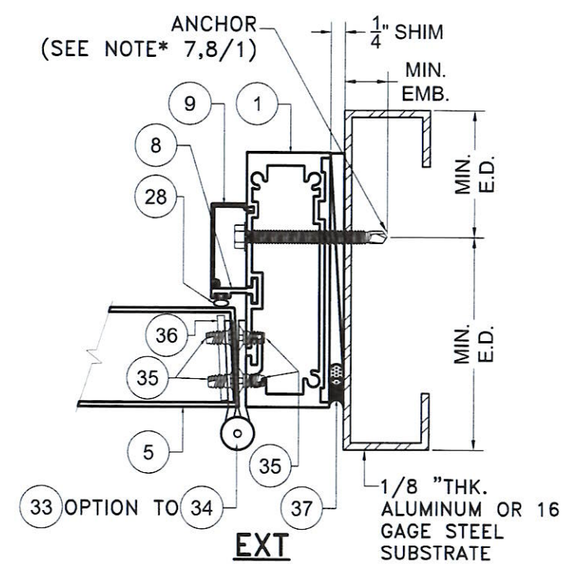

ALUMINUM / STEEL MEMBER SUBSTRATE

FLORIDA BUILDING CODE (HIGH & NON HIGH VELOCITY HURRICANE ZONE)

PERFORMANCE COMMERCIAL OUTSWING ENTRANCE DOOR

ALUMINA DISTRIBUTION CENTER
15002 NW. 107 AVE.
HIALEAH GARDENS, FL. 33018
PHONE: (305) 444-1198

REV. NO	DESCRIPTION	DATE	REV. No	DESCRIPTION	DATE
1	-	-	3	-	-
2	-	-	4	-	-

F.R.L. DRAWN BY:
06/13/19 DATE:
19-057 DRAWING No.
SHEET 16A OF 33

©2019 TILTECO, INC.

TILTECO INC.
TILLIT TESTING & ENGINEERING COMPANY
6355 N.W. 36th. St., Ste. 305, VIRGINIA GARDENS, FL 33166
Phone : (305)871-1530 . Fax : (305)871-1531
CA-0006719
WALTER A. TILLIT Jr. P.E.
FLORIDA Lic. # 44167

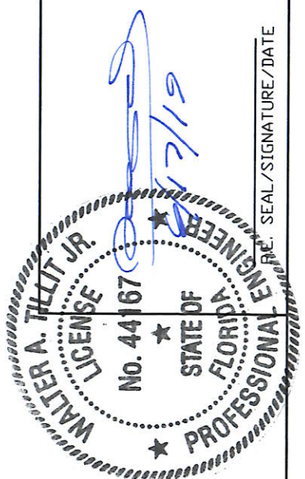

P.E. SEAL/SIGNATURE/DATE

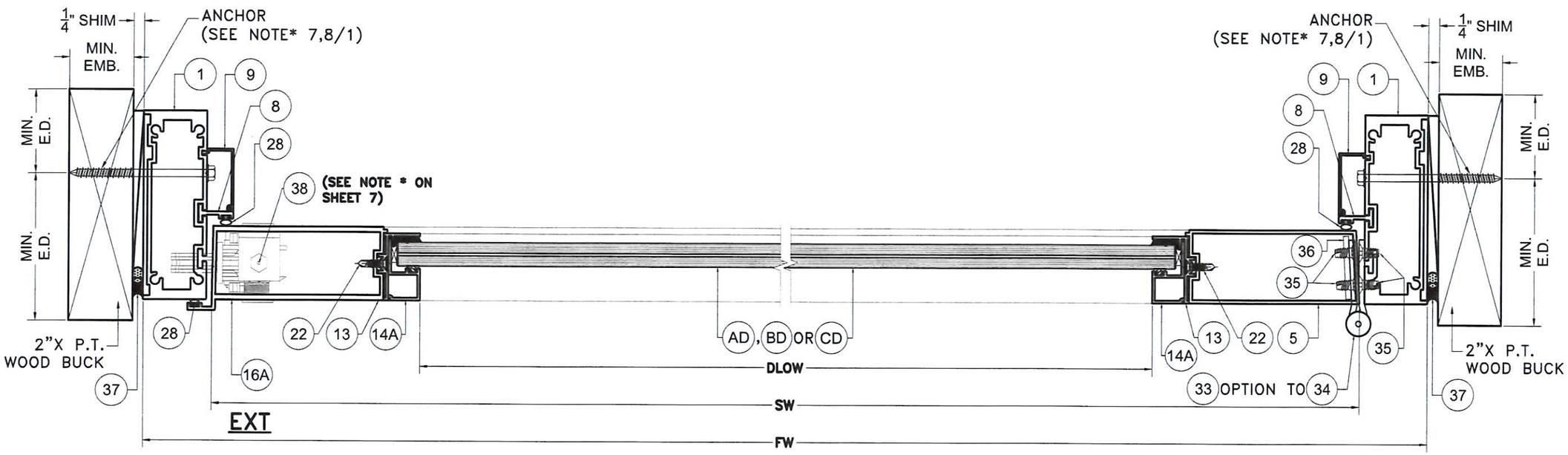

WOOD SUBSTRATE

SECTION 1–1

SCALE 3/8"=1"

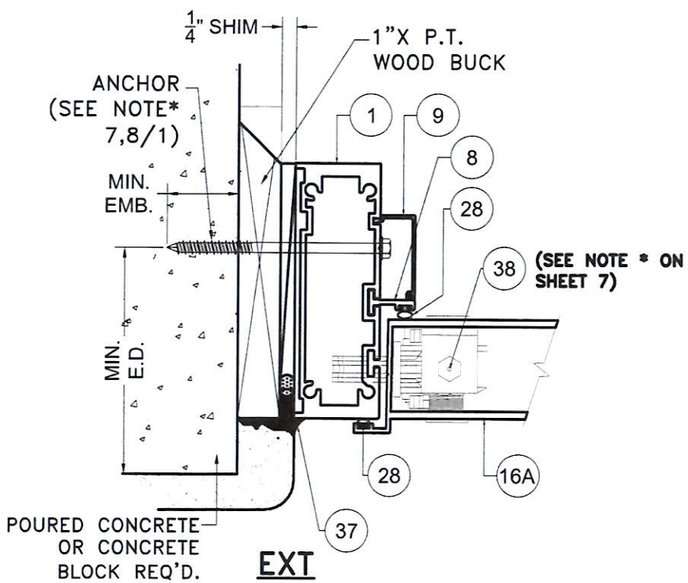

POURED CONCRETE/ CONCRETE BLOCK SUBSTRATE

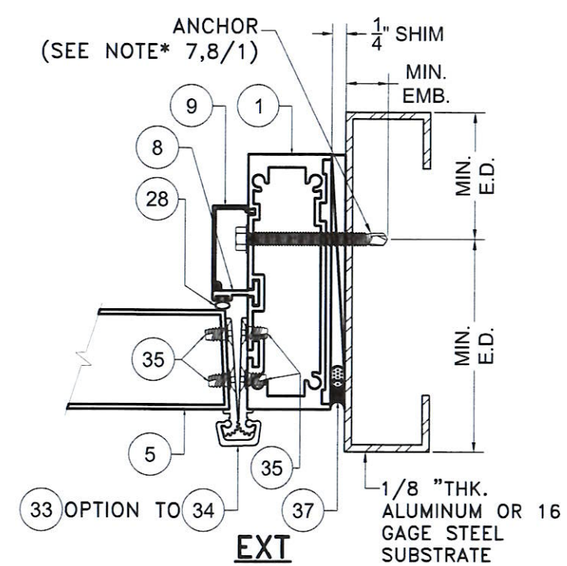

ALUMINUM / STEEL MEMBER SUBSTRATE

FLORIDA BUILDING CODE (HIGH & NON HIGH VELOCITY HURRICANE ZONE)

F.R.L. DRAWN BY:

06/13/19 DATE:

19–057 DRAWING No.

SHEET 17 OF 33

PERFORMANCE COMMERCIAL OUTSWING ENTRANCE DOOR

ALUMINA DISTRIBUTION CENTER
15002 NW. 107 AVE.
HIALEAH GARDENS, FL. 33018
PHONE: (305) 444–1198

REV. NO	DESCRIPTION	DATE	REV. No	DESCRIPTION	DATE
1	-	-	3	-	-
2	-	-	4	-	-

©2019 TILTECO, INC.

TILTECO INC.
TILLIT TESTING & ENGINEERING COMPANY
6355 N.W. 36th. St., Ste. 305, VIRGINIA GARDENS, FL 33166
Phone : (305)871–1530 . Fax : (305)871–1531
CA–0006719
WALTER A. TILLIT Jr. P.E.
FLORIDA Lic. # 44167

WALTER A. TILLIT JR. LICENSE No. 44167 STATE OF FLORIDA PROFESSIONAL ENGINEER

6/17/19

SEAL/SIGNATURE/DATE

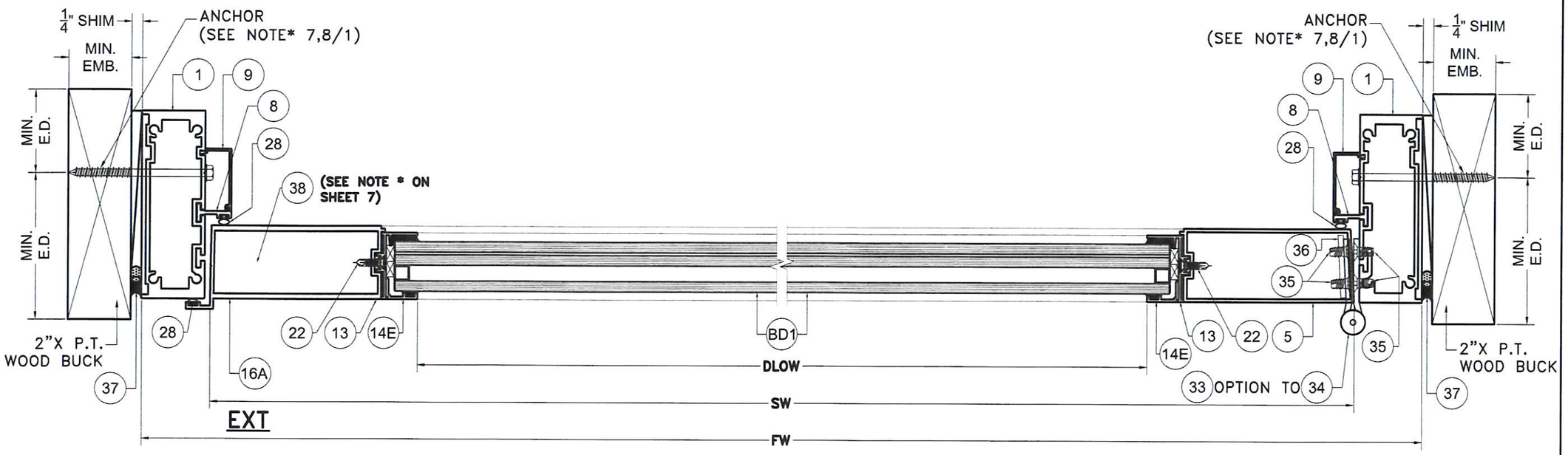

WOOD SUBSTRATE

SECTION 11–11

SCALE 3/8"=1"

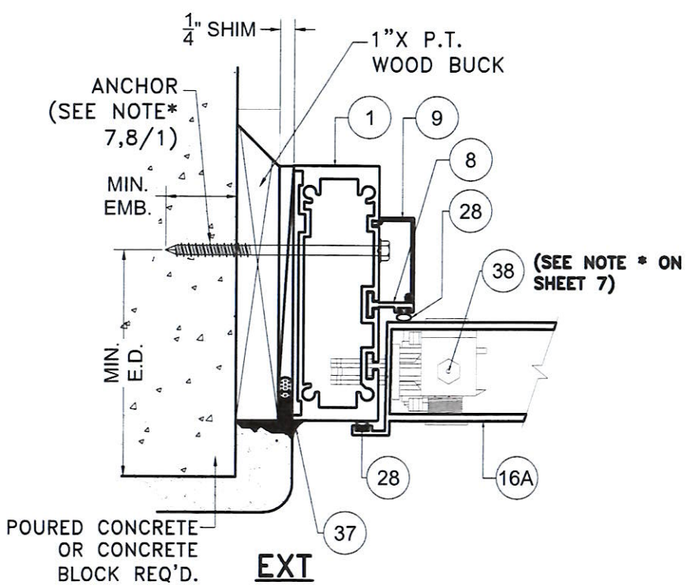

POURED CONCRETE/ CONCRETE BLOCK SUBSTRATE

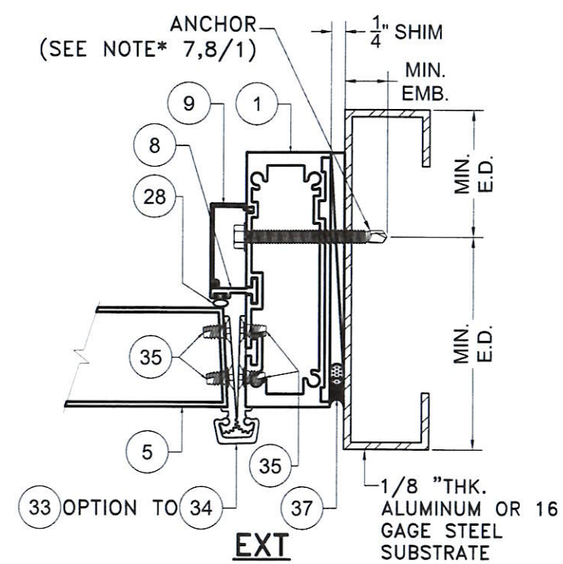

ALUMINUM / STEEL MEMBER SUBSTRATE

FLORIDA BUILDING CODE (HIGH & NON HIGH VELOCITY HURRICANE ZONE)

F.R.L.
DRAWN BY:

06/13/19
DATE:

19-057
DRAWING No.

SHEET 17A OF 33

PERFORMANCE COMMERCIAL OUTSWING ENTRANCE DOOR

ALUMINA DISTRIBUTION CENTER
15002 NW. 107 AVE.
HIALEAH GARDENS, FL. 33018
PHONE: (305) 444-1198

REV. NO	DESCRIPTION	DATE	REV. No	DESCRIPTION	DATE
1	-	-	3	-	-
2	-	-	4	-	-

©2019 TILTECO, INC.

TILTECO INC.
TILLIT TESTING & ENGINEERING COMPANY
6355 N.W. 36th. St., Ste. 305, VIRGINIA GARDENS, Fl. 33166
Phone : (305)871-1530 , Fax : (305)871-1531
CA-0006719
WALTER A. TILLIT Jr. P.E.
FLORIDA Lic. # 44167

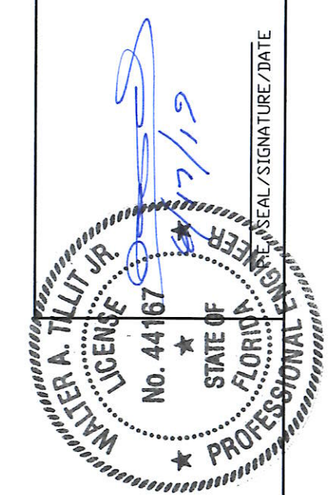

SEAL/SIGNATURE/DATE

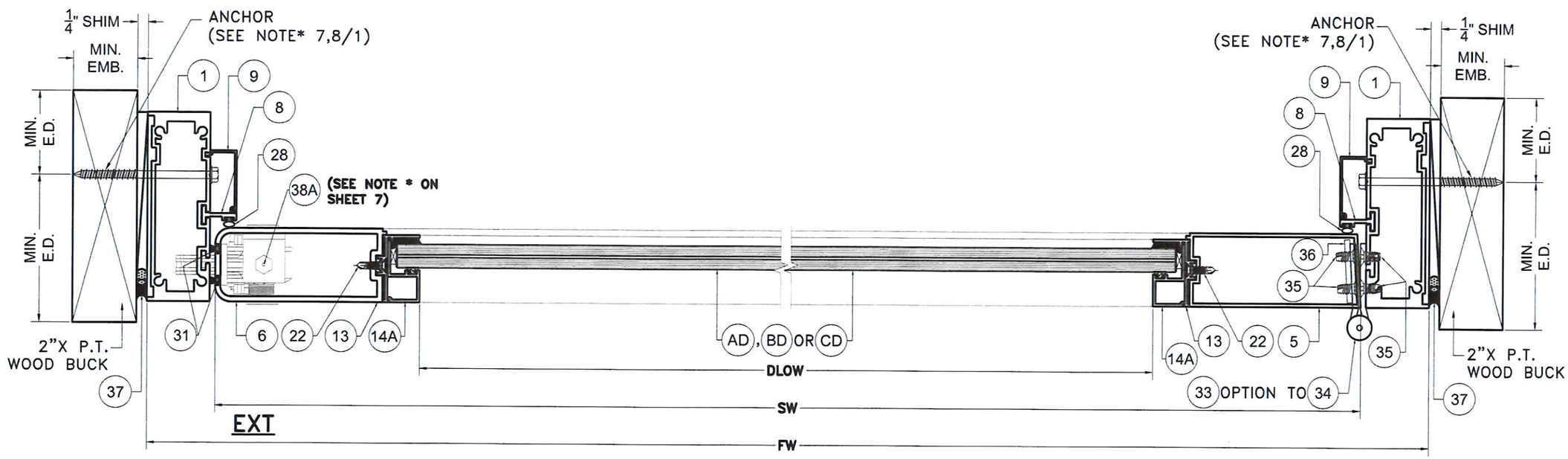

WOOD SUBSTRATE

SECTION H–H

SCALE 3/8"=1"

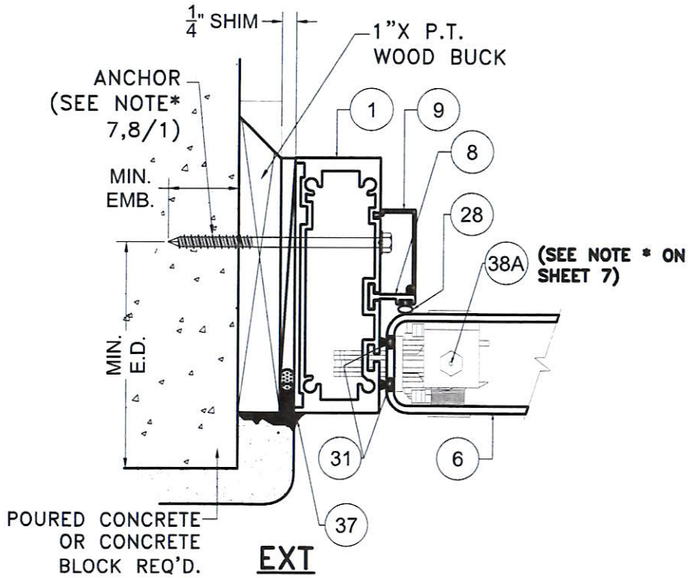

POURED CONCRETE/ CONCRETE BLOCK SUBSTRATE

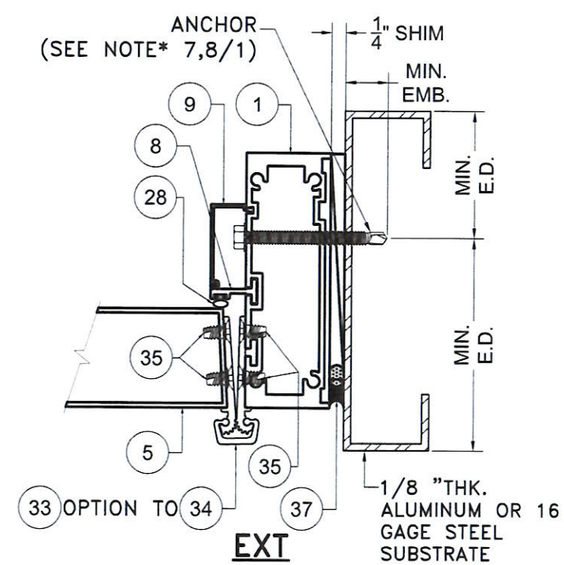

ALUMINUM / STEEL MEMBER SUBSTRATE

FLORIDA BUILDING CODE (HIGH & NON HIGH VELOCITY HURRICANE ZONE)

F.R.L.
DRAWN BY:

06/13/19
DATE:

19–057
DRAWING No.

SHEET 18 OF 33

PERFORMANCE COMMERCIAL OUTSWING ENTRANCE DOOR

ALUMINA DISTRIBUTION CENTER
15002 NW. 107 AVE.
HIALEAH GARDENS, FL. 33018
PHONE: (305) 444–1198

REV. NO	DESCRIPTION	DATE	REV. No	DESCRIPTION	DATE
1	-	-	3	-	-
2	-	-	4	-	-

©2019 TILTECO, INC.

TILTECO INC.
TILLIT TESTING & ENGINEERING COMPANY
6355 N.W. 36th. St., Ste. 305, VIRGINIA GARDENS, FL. 33166
Phone : (305)871–1530 , Fax : (305)871–1531
CA–0006719
WALTER A. TILLIT Jr. P.E.
FLORIDA Lic. # 44167

P.E. SEAL/SIGNATURE/DATE

WALTER A. TILLIT JR. LICENSE No. 44167 STATE OF FLORIDA PROFESSIONAL ENGINEER